Federal Register

Wednesday,
March 15, 2006

Part II

Consumer Product Safety Commission

16 CFR Part 1633

Standard for the Flammability (Open Flame) of Mattress Sets; Final Rule

CONSUMER PRODUCT SAFETY COMMISSION

16 CFR Part 1633

Final Rule: Standard for the Flammability (Open Flame) of Mattress Sets

AGENCY: Consumer Product Safety Commission.

ACTION: Final rule.

SUMMARY: The Consumer Product Safety Commission (''Commission'') is issuing a flammability standard under the authority of the Flammable Fabrics Act. This new standard establishes performance requirements based on research conducted by the National Institute of Standards and Technology (''NIST''). Mattresses and mattress and foundation sets (''mattress sets'') that comply with the requirements will generate a smaller size fire with a slower growth rate, thus reducing the possibility of flashover occurring. These improved mattresses should result in significant reductions in deaths and injuries associated with the risk of mattress fires. The Commission estimates that the standard could limit the size of mattress fires to the extent that 240 to 270 deaths and 1,150 to 1,330 injuries could potentially be eliminated annually. As discussed in the preamble, this means that the standard could yield lifetime net benefits of $23 to $50 per mattress or aggregate lifetime net benefits for all mattresses produced in the first year of the standard of $514 million to $1,132 million.

DATES: The rule will become effective on July 1, 2007 and applies to mattress sets manufactured, imported, or renovated on or after that date.

FOR FURTHER INFORMATION CONTACT: Jason Hartman, Office of Compliance, U.S. Consumer Product Safety Commission, 4330 East West Highway, Bethesda, Maryland 20814; telephone (301) 504–7591; e-mail *jhartman@cpsc.gov*.

SUPPLEMENTARY INFORMATION:

A. Background

The Commission is issuing this flammability standard to reduce deaths and injuries related to mattress fires, particularly those initially ignited by open flame sources such as lighters, candles and matches.[1] Although the Commission has a flammability standard directed toward cigarette ignition of mattresses, 16 CFR Part 1632, a significant number of mattress fires are ignited by open flame sources and are not directly addressed by that standard.

On October 11, 2001, the Commission issued an advance notice of proposed rulemaking (''ANPR'') concerning the open flame ignition of mattresses/bedding. 66 FR 51886. CPSC, industry, and the California Bureau of Home Furnishings and Thermal Insulation (''CBHF'') worked with National Institute of Standards and Technology (''NIST''), which conducted research to develop a test method that could be included in a standard to address open flame ignition of mattresses. On January 13, 2005, the Commission issued a notice of proposed rulemaking (''NPR'') proposing a flammability standard based on the NIST research. 70 FR 2470. Comments received in response to the NPR are discussed in section H of this notice.

The characteristics of mattress/bedding fires and research conducted to develop the standard are discussed in detail in the NPR, 70 FR 2470, and in the staff's technical memoranda supporting this rulemaking. Because a mattress contains a substantial amount of flammable materials, if it (one that does not meet the standard) ignites in a bedroom fire the mattress will burn rapidly, and will quickly reach dangerous flashover conditions within a few minutes. Flashover is the point at which the entire contents of a room are ignited simultaneously by radiant heat, making conditions in the room untenable and safe exit from the room impossible. At flashover, room temperatures typically exceed 600–800° C (approximately 1100–1470° F). About two-thirds of all mattress fatalities are attributed to mattress fires that lead to flashover. This accounts for nearly all of the fatalities that occur outside the room where the fire originated and about half of the fatalities that occur within the room of origin.

The size of a fire can be measured by its rate of heat release. A heat release rate of approximately 1,000 kilowatts (''kW'') leads to flashover in a typical room. Tests of twin size mattresses of traditional constructions (complying with the existing mattress cigarette ignition standard in 16 CFR 1632) without bedclothes have measured peak heat release rates that exceeded 2,000 kW in less than 5 minutes. In tests of traditional king size mattresses, peak rates of heat release were nearly double that. [2] [2]

The goal of the standard is to minimize or delay flashover when a mattress is ignited in a typical bedroom fire. With certain exceptions explained below, the standard requires manufacturers to test specimens of each of their mattress prototypes (designs) before mattresses based on that prototype may be introduced into commerce. The standard prescribes a full-scale test using a pair of T-shaped gas burners designed to represent burning bedclothes. The mattress set must not exceed a peak heat release rate of 200 kW at any time during a 30 minute test, and the total heat release for the first 10 minutes of the test must not exceed 15 megajoules (''MJ''). Mattresses that meet the standard's criteria will make only a limited contribution to a fire, especially in the early stages of the fire. This will allow occupants more time to discover the fire and escape. [1&2]

The State of California's Bureau of Home Furnishings and Thermal Insulation issued an open flame fire standard for mattresses and mattress/box spring sets and futons, TB 603, which went into effect January 1, 2005. Both the Commission's standard and TB 603 are based on the research conducted at NIST, and they use the same basic test method. Both TB 603 and the Commission's standard require that mattresses not exceed a 200 kW peak heat release rate during the 30 minute test. However, the standards differ in the limit they set on total energy release in the first ten minutes of the test (the Commission's standard sets a stricter limit of 15 MJ, while TB 603 sets the limit at 25 MJ).

NIST has conducted extensive research on mattress/bedding fires for the Sleep Products Safety Council (''SPSC'') and the Commission. The NPR summarized the research that was conducted to develop the test method and other research conducted prior to publication of the NPR. 70 FR 2470. Subsequently, CPSC contracted with NIST to conduct additional test work to explore technical issues raised in the comments that the Commission received on the NPR and to provide additional technical support for finalizing the

[1] Chairman Hal Stratton and Commissioner Nancy Nord issued a joint statement, and Commissioner Thomas H. Moore issued a separate statement. These are available from the Commission's Office of the Secretary (Office of the Secretary, Consumer Product Safety Commission, Room 502, 4330 East-West Highway, Bethesda, Maryland 20814; telephone 301–504–7293; or e-mail: *cpsc-os@cpsc.gov*) or from the Commission's Web site, *www.cpsc.gov*.

[2] Numbers in brackets refer to documents listed at the end of this notice. They are available from the Commission's Office of the Secretary, (Office of the Secretary, Consumer Product Safety Commission, Room 502, 4330 East-West Highway, Bethesda, Maryland 20814; telephone 301–504–7293; or e-mail: *cpsc-os@cpsc.gov*) or from the Commission's Web site (*http://www.cpsc.gov/library/foia/foia.html*).

standard. This work included a series of tests to evaluate the heat flux of different burner hole sizes, effects of temperature and relative humidity conditions, flammability behavior of one-sided mattresses, and flammability performance (durability) of selected flame retardant barriers. This research is discussed in the CPSC Engineering Sciences Directorate's memorandum, ''Technical Rationale for the Standard for the Flammability (Open-Flame) of Mattress Sets and Engineering Responses to Applicable Public Comments,'' and the staff's briefing memorandum. [2&1]

B. Statutory Authority

This proceeding is conducted pursuant to Section 4 of the Flammable Fabrics Act (''FFA''), which authorizes the Commission to initiate proceedings for a flammability standard when it finds that such a standard is ''needed to protect the public against unreasonable risk of occurrence of fire leading to death or personal injury, or significant property damage.'' 15 U.S.C. 1193(a).

Section 4 also sets forth the process by which the Commission may issue a flammability standard. As required in section 4(g), the Commission issued an ANPR. 66 FR 51886. 15 U.S.C. 1193(g). The Commission reviewed the comments submitted in response to the ANPR and issued a notice of proposed rulemaking (''NPR'') containing the text of the proposed rule along with alternatives the Commission has considered and a preliminary regulatory analysis. 70 FR 2470. 15 U.S.C. 1193(i). The Commission considered comments provided in response to the NPR and is issuing this final rule along with a final regulatory analysis. 15 U.S.C. 1193(j). The Commission cannot issue a final rule unless it makes certain findings and includes these in the regulation. The Commission must find: (1) If an applicable voluntary standard has been adopted and implemented, that compliance with the voluntary standard is not likely to adequately reduce the risk of injury, or compliance with the voluntary standard is not likely to be substantial; (2) that benefits expected from the regulation bear a reasonable relationship to its costs; and (3) that the regulation imposes the least burdensome alternative that would adequately reduce the risk of injury. 15 U.S.C. 1193(j)(2). In addition, the Commission must find that the standard (1) is needed to adequately protect the public against the risk of the occurrence of fire leading to death, injury or significant property damage, (2) is reasonable, technologically practicable, and appropriate, (3) is limited to fabrics, related materials or products which present unreasonable risks, and (4) is stated in objective terms. 15 U.S.C. 1193(b). The Commission makes these findings in section 1633.8 of the rule.

C. The Product

The standard applies to mattresses and mattress and foundation sets (''mattress sets''). ''Mattress'' is defined as a resilient material, used alone or in combination with other materials, enclosed in a ticking and intended or promoted for sleeping upon. For further details on how the term is defined in the standard see section E.3. of this preamble.

Throughout the standard the Commission uses the term ''mattress set'' to mean a mattress alone if the mattress is manufactured for sale without a foundation, or a mattress and a foundation together, if the mattress is manufactured for sale with a foundation. Under the standard, a mattress manufactured for sale with a foundation must be tested with its foundation and a mattress manufactured for sale alone must be tested alone.

According to the International Sleep Products Association (''ISPA''), the top four producers of mattresses and foundations account for almost 60 percent of total U.S. production. In 2003, there were 571 establishments producing mattresses in the U.S. [7]

Mattresses and foundations are typically sold as sets. However, more mattresses are sold annually than foundations; some mattresses are sold as replacements for existing mattresses (without a new foundation) or are for use in platform beds or other beds that do not require a foundation. ISPA estimated that the total number of U.S. conventional mattress shipments was 22.5 million in 2004, and would be 23.0 million in 2005. These estimates do not include futons, crib mattresses, juvenile mattresses, sleep sofa inserts, or hybrid water mattresses. These ''non-conventional'' sleep surfaces are estimated to comprise about 10 percent of total annual shipments of all sleep products. The value of conventional mattress and foundation shipments in 2004, according to ISPA, was $4.10 and $1.69 billion respectively, compared to $3.28 and $1.51 billion respectively in 2002. [7]

The expected useful life of mattresses can vary substantially, with more expensive models generally experiencing the longest useful lives. Industry sources recommend replacement of mattresses after 10 to 12 years of use, but do not specifically estimate the average life expectancy. In the 2001 mattress ANPR, the Commission estimated the expected useful life of a mattress at about 14 years. To estimate the number of mattresses in use for analysis of the proposed rule, the Commission used both a 10 year and 14 year average product life. Using CPSC's Product Population Model, the Commission estimates the number of mattresses (conventional and non-conventional) in use in 2005 to be 237 million using a ten-year average product life, and 303.9 million using a fourteen-year average product life. [7]

According to industry sources, queen size mattresses are the most commonly used. In 2004, queen size mattresses were used by 34.9 percent of U.S. consumers. Twin and twin XL were used by 29.3 percent of U.S. consumers, followed by full and full XL (19.9 percent), king and California king (11.5 percent), and all other sizes (4.4 percent). The average manufacturing price in 2004 was $182 for a mattress and $90 for a foundation. Thus, the average manufacturing price of a mattress and foundation set was about $272 in 2004. Although there are no readily available data on average retail prices for mattress/foundation sets by size, ISPA reports that sets selling under $500 represented 34.6 percent of the market in 2004 compared to 40.7 percent in 2002. Sets selling for between $500 and $1000 represented 41.1 percent of the market in 2004, compared to 39.2 percent in 2002. [7]

The top four manufacturers of mattresses and foundations operate about one-half of the 571 U.S. establishments producing these products. The remainder of the establishments are operated by smaller firms. According to the Statistics of U.S. Businesses Census Bureau data, all but twelve mattress firms had fewer than 500 employees in 2002. If one considers a firm with fewer than 500 employees to be a small business, then 97.7 percent ((522–12)/522) of all mattress firms are small businesses. [7] The potential impact of the standard on these small businesses is discussed in section K of this document.

D. Risk of Injury

Annual estimates of national fires and fire losses involving ignition of a mattress or bedding are based on data from the U.S. Fire Administration's National Fire Incident Reporting System (''NFIRS'') and the National Fire Protection Administration's (''NFPA'') annual survey of fire departments. The most recent national fire loss estimates indicated that mattresses and bedding were the first items to ignite in 15,300 residential fires attended by the fire

service annually during 1999–2002. These fires resulted in 350 deaths, 1,750 injuries and $295.0 million in property loss annually. Of these, the staff considers an estimated 14,300 fires, 330 deaths, 1,680 injuries, and $281.5 million property loss annually to be addressable by the standard. Addressable means the incidents were of a type that would be affected by the standard solely based on the characteristics of the fire cause (i.e., a fire that ignited a mattress or that ignited bedclothes which in turn ignited the mattress). For example, an incident that involved burning bedclothes but occurred in a laundry room would not be considered addressable. [3]

Among the addressable casualties, open flame fires accounted for about 110 deaths (33 percent) and 890 injuries (53 percent) annually. Smoking fires accounted for 180 deaths (55 percent) and about 520 injuries (31 percent) annually. Children younger than age 15 accounted for an estimated 90 addressable deaths (27 percent) and 340 addressable injuries (20 percent) annually. Adults age 65 and older accounted for an estimated 80 addressable deaths (24 percent) and 180 addressable injuries (11 percent) annually. [3]

E. Description of the Final Standard

1. General

The standard sets forth performance requirements that all mattress sets must meet before being introduced into commerce. The test method is a full scale test based on the NIST research discussed above and in the NPR. The mattress specimen (a mattress alone or mattress and foundation set, usually in a twin size) is exposed to a pair of T-shaped propane burners and allowed to burn freely for a period of 30 minutes. The burners were designed to represent burning bedclothes. Measurements are taken of the heat release rate from the specimen and energy generated from the fire. The standard establishes two test criteria, both of which the mattress set must meet in order to comply with the standard: (1) The peak rate of heat release for the mattress set must not exceed 200 kW at any time during the 30 minute test; and (2) The total heat release must not exceed 15 MJ for the first 10 minutes of the test.

2. Imported Mattresses

Imported mattresses must meet the same requirements as domestically produced mattresses. This means that mattress sets produced outside the United States must be tested in accordance with the procedures described in § 1633.7 and must meet the criteria specified in § 1633.3(b), as well as the quality assurance and recordkeeping requirements in §§ 1633.6 and 1633.11 before they may be introduced into commerce in the United States.

As discussed below, the term ''manufacturer'' refers to the establishment where a mattress is produced or assembled, and it is the plant or factory producing or assembling the mattress set that is responsible for prototype testing. The importer must have records demonstrating compliance with the standard on an establishment specific basis. To ensure that foreign-made mattress sets comply with the standard, the final rule requires that the records specified in § 1633.11 must be in English and must be kept at a location in the United States.

3. Scope and Definitions (§§ 1633.1 and 1633.2)

The standard applies to ''mattress sets,'' defined as either (1) a mattress and foundation labeled by the manufacturer for sale as a set, or (2) a mattress that is labeled for sale alone. This definition was not in the proposed rule, but was added to simplify the sometimes cumbersome references to mattress and foundation sets. As discussed below, the Commission has added a requirement for manufacturers to label mattresses and foundations to indicate if they are to be sold with a corresponding mattress or foundation or if they are to be sold alone.

''Mattress'' is defined substantially as it was in the proposed rule and as it is in the existing mattress standard at 16 CFR 1632, as ''a resilient material or combination of materials enclosed by a ticking (used alone or in combination with other products) intended or promoted for sleeping upon.'' The standard lists several types of mattresses that are included in this definition (e.g., futons, crib mattresses, youth mattresses). It also refers to a glossary of terms where these items are further defined.

Specifically excluded from the definition of mattress are mattress pads, pillows and other items used on top of a mattress, upholstered furniture which does not contain a mattress, and juvenile or other product pads. Mattress pads and other top of the bed items may be addressed in the Commission's pending rulemaking on bedclothes, in which an ANPR was issued on January 13, 2005. 70 FR 2514.

Like the Commission's existing mattress cigarette ignition standard, the open flame standard issued today allows an exemption for one-of-a-kind mattress sets if they are manufactured to fulfill a physician's written prescription or manufactured in accordance with comparable medical therapeutic specifications.

The Commission has added a clarification that the term ''mattress'' includes mattresses that have undergone renovation, and it has added a definition of ''renovation.'' The NPR had included a policy clarification stating that mattresses renovated for resale would be covered by the standard. The definition of ''renovation'' comes from that policy clarification. Including mattresses renovated for resale in the mattress definition makes the Commission's intent to include them in the standard clearer.

For clarification the Commission has added or modified some other definitions. The term ''subordinate prototype'' was added to refer to a prototype that is not required to be tested. A definition of ''confirmed prototype'' was added to describe a prototype that is based on a qualified prototype in a pooling arrangement. The term ''edge seam'' was redefined as ''edge'' to accommodate mattress or foundation constructions that do not have a seam, as in a continental border. A definition for ''prototype developer'' was added to describe a third party that designs mattress prototypes for use by a manufacturer, but does not produce mattress sets for sale. The prototype developer does not necessarily conduct tests to qualify the mattress prototype. A barrier supplier, for example, could be a prototype developer. The term ''prototype pooling'' was clarified to explain the responsibilities of the involved parties.

4. General Requirements of the Standard (§ 1633.3)

The test method in the standard is essentially unchanged from the method described in the NPR. It uses the full scale test method developed by NIST. As explained in the NPR, the complexities of mattress construction make a full scale test necessary to evaluate the fire performance of a mattress.

The specimen (a mattress and foundation or mattress alone) is exposed to a pair of T-shaped gas burners. The specimen is to be no smaller than twin size, unless the largest size mattress or set produced of that type is smaller than twin size, in which case the largest size must be tested.

The burners impose a specified local heat flux simultaneously to the top and side of the mattress set for a specified period of time (70 seconds for the top burner and 50 seconds for the side

burner). The burners were designed to represent the local heat flux imposed on a mattress by burning bedclothes based on research conducted by NIST. Details of the test method are discussed in section E.9. below.

5. Test Criteria (§ 1633.3)

The standard establishes two test criteria that the specimen must meet to pass the test. These criteria are the same as those proposed in the NPR. The peak rate of heat release must not exceed 200 kW at any time during the 30 minute test, and the total heat release must not exceed 15 MJ during the first 10 minutes of the test.

Limiting the peak rate of heat release to 200 kW (during the 30 minute test) ensures a less flammable design. It represents a significant improvement in performance compared to traditional mattress designs. The peak rate of heat release limit accounts for the contribution of bedclothes and other room contents to the fire hazard, ensures that the mattress does not cause flashover on its own, is technically feasible, and considers many factors related to the fire scenario (such as room effects). [2]

The test duration of 30 minutes is related to, but not equivalent to, the estimated time required to permit discovery of the fire and allow escape under typical fire scenarios. A 30 minute test is based on an analysis of the hazard and the technological feasibility of producing complying mattresses. It is intended to provide a substantial increase in time for an occupant to discover and escape the fire. The number of failures, test variability, performance unreliability, and associated costs increase significantly with longer test periods. Usually, staying at or below the 200kW limit for a 30 minute test is estimated to provide an adequate time for fire discovery and escape by occupants in the bed or otherwise in the room of fire origin. [2]

The effectiveness of the standard depends on the need for early discovery and escape from the fire without delay. Limiting the early contribution of the mattress will have the greatest impact on reducing the risk as the mattress will have little involvement in the fire for the specified period of time. The early limit of 15 MJ for the first 10 minutes of the test partially compensates for burning bedclothes and ticking by preventing early involvement of the mattress as the bedclothes burn and compensates for other items that might be involved early in a fire. [2]

California's TB 603 prescribes a 25 MJ limit in the first 10 minutes of the test. However, NIST research and fire modeling indicate that a fire that reaches a size of 25 MJ within 10 minutes could limit a person's ability to escape the room. According to several producers, mattress sets that use available barrier technology release total heat that is far below the 25 MJ limit of TB 603. [7]

6. Prototype Testing (§ 1633.4)

The standard requires, with certain exceptions, that mattress manufacturers have three specimens of each prototype tested before introducing a mattress set into commerce. A prototype is a specific design of a mattress set that serves as a model for the production units that will be introduced into commerce. Mattress sets then produced based on the prototype mattress set must be the same as the prototype with respect to materials, components, design, and methods of assembly. The definition of ''manufacturer'' refers to the establishment where the mattress is produced or assembled, not the company. Thus, the plant or factory producing or assembling the mattress set is responsible for prototype testing.

However, there are three exceptions to the requirement for prototype testing. A manufacturer is allowed to sell a mattress set based on a prototype that has not been tested if the prototype differs from a qualified prototype (one that has been tested and meets the criteria) only with respect to: (1) The mattress/foundation length and width, not depth (e.g., twin, queen, king, etc.); (2) the ticking, unless the ticking of the qualified prototype has characteristics that are designed to improve the mattress set's test performance; and/or (3) any component, material or method of assembly, provided that the manufacturer can show, on an objectively reasonable basis, that such difference(s) will not cause the mattress set to exceed the specified test criteria. The third exception allows the manufacturer to change the depth of the mattress if he can make the required showing concerning the test criteria. If a manufacturer chooses to make use of the third exception, he/she can minimize testing, but must maintain records documenting that the change(s) will not cause the prototype to exceed the test criteria (see § 1633.11(b)(4) of the rule).

When conducting prototype qualification testing, the manufacturer must test a minimum of three specimens of the prototype in accordance with the test method described, and all of the mattress sets must meet both of the test criteria discussed above. If any one prototype specimen that the manufacturer tests fails the specified criteria, the prototype is not qualified (even if the manufacturer chooses to test more than three specimens).

As explained in the NPR preamble, the Commission believes that three specimens is the appropriate minimum number for testing at this time (as this is the number typically used and the inter-laboratory study indicates that three replicates are appropriate to adequately characterize mattress performance).

As was proposed, the standard allows a manufacturer to produce a mattress set in reliance on testing that was conducted before the effective date of the standard. The final rule explains the parameters for relying on such tests. The manufacturer must have documentation demonstrating that the tests were conducted according to the required test method and the specified criteria were met. Tests conducted 30 days or more after this standard is published in the **Federal Register** must comply with the recordkeeping requirements of § 1633.11. The manufacturer must also comply with applicable recordkeeping requirements in order to use the prototype pooling and subordinate prototype provisions.

7. Pooling (§ 1633.5)

This section is substantively the same as proposed, but some of the language has been revised for clarification. The standard allows one or more manufacturers to rely on a given prototype that has been developed by a manufacturer or a prototype developer (e.g., a component manufacturer). Under this approach, one manufacturer or prototype developer would conduct (or cause to be conducted) the full prototype testing required (testing three prototype specimens), obtaining passing results, and the other manufacturer(s) may then produce mattress sets represented by that qualified prototype so long as they conduct one successful confirmation test on a specimen they produce. If the mattress set fails the confirmation test, the manufacturer must take corrective measures, and then perform a new confirmation test that must meet the test criteria. If a confirmation test specimen fails to meet the test criteria, the manufacturer of that specimen must also notify the manufacturer that developed the prototype about the test failure.

Pooling may be used by two or more plants within the same firm or by two or more independent firms. The final rule also recognizes that pooling can occur between a manufacturer and a prototype developer. This could be a company that manufactures mattress

components and conducts testing for the manufacturer. As discussed in the regulatory flexibility analysis, pooling should reduce testing costs for smaller companies. Once they have conducted a successful confirmation test, pooling firms can produce mattresses based on a pooled prototype and may continue to do so as long as any changes to the mattress set based on the pooled prototype are limited to the three discussed above: (1) Width or length of the mattress set; (2) the ticking, unless the qualified ticking has characteristics that are designed to improve the mattress's test performance; and/or (3) any component, material or method of assembly that the manufacturer can show (on an objectively reasonable basis) will not cause the prototype to exceed the specified test criteria.

8. Quality Assurance Requirements (§ 1633.6)

The standard contains the same strict requirements for quality assurance as the proposal did. This is necessary because research and testing indicate that small variations in construction (e.g., missed stitching around the side of the mattress) can affect the fire performance of a mattress. Testing conducted at NIST after the NPR was published reinforced the importance of quality assurance. The language in this section has been changed somewhat to better indicate the Commission's intent that production mattresses should be the same as the prototypes on which they are based.

Each manufacturer must implement a quality assurance program to ensure that the mattress sets it produces are the same as the qualified, subordinate or confirmed prototype on which they are based with respect to materials, components, design and methods of assembly. This means that at a minimum, manufacturers must: (1) Have controls in place on components, materials and methods of assembly to ensure that they are the same as those used in the prototype; (2) designate a production lot that is represented by the prototype; and (3) inspect mattress sets produced for sale.

The standard does not require manufacturers to conduct testing of production mattresses. However, the Commission recognizes the value of such testing as part of a quality assurance program. Therefore, the Commission encourages manufacturers to conduct random testing of mattress sets that are produced for sale.

If a manufacturer obtains any test results or any other evidence indicating that a mattress set does not meet the specified criteria (or that a component, material or assembly process could negatively affect the test performance of the mattress set), the manufacturer must cease production and distribution in commerce of the affected mattress sets until corrective action is taken.

9. Test Procedure (§ 1633.7)

The test procedure in the standard is based on the test protocol developed by NIST. The procedure in the final standard is essentially the same as what was proposed with some minor changes and a few substantive modifications described below.

Requirements for sample conditioning have been tightened to require a conditioning temperature greater than 18° C (65° F) and less than 25° C (77° F) and a relative humidity less than 55 percent. Requirements for the test area conditions have been added, stating that the area must be maintained at a temperature greater than 15° C (59° F) and less than 27° C (80.6° F) and at a relative humidity less than 75 percent. Initiation of flammability testing is required to begin within 20 minutes after removal of the mattress sample from environmentally controlled storage conditions.

Specifications for the bed frame supporting the test specimen have been clarified to address dimensions for specimens other than twin-size, frame height to accommodate the side burner in tests of thin mattresses without foundations, and support for more flexible mattress products.

The specification for the gas burner hole size has been changed. In 2000, NIST developed a pair of propane gas burners to consistently simulate the typical heat impact imposed on a mattress by burning bedding items. These burners were incorporated as the ignition source in the full-scale fire test for mattresses. Subsequently, a commercial supplier manufactured a commercial version of the NIST burner apparatus that was used by various test laboratories to conduct full-scale mattress testing in accordance with TB 603 and CPSC's proposed standard. Inadvertently, the commercial version incorporated larger diameter holes in both of the burner heads (1.50 mm vs. 1.17 mm). The proposed standard specified the original NIST burner holes. After this difference was discovered, NIST conducted studies to determine the effects of the larger diameter burner holes on peak burner heat flux. The results of the comparison show that the burners with the larger holes do a better job of meeting the target peak flux levels of bedclothes than do the original burners with the smaller holes, supporting continued use of the commercial version of the burner apparatus rather than the NIST original. The final standard has been revised to provide for the burner holes used in the commercial versions. [1&2]

A provision has been added to the standard at § 1633.7(k) that allows the use of alternate test apparatus with the approval of the Office of Compliance.

Other minor changes in the test procedure, equipment and set up include clarifications of gas specifications, draft control, and burner orientation. These are discussed in the Engineering Sciences and Laboratory memoranda. [1,4&5]

10. Recordkeeping (§ 1633.11)

The Commission made several changes to the recordkeeping requirements. The standard now requires that records must be kept in English at a location in the United States and requires the complete physical addresses of suppliers, manufacturing facilities (foreign and domestic), and test laboratories in records. The standard no longer requires the manufacturer to maintain a physical sample of the materials and components of a prototype. The required records should be sufficient to determine compliance without the burden of maintaining physical samples.

The standard requires manufacturers to maintain certain records to document compliance with the standard. This includes records concerning prototype testing, pooling and confirmation testing, and quality assurance procedures and any associated testing. The required records must be maintained for as long as mattress sets based on the prototype are in production and must be retained for three years thereafter.

11. Labeling (§ 1633.12)

The labeling required by the standard has been modified from the proposed rule. These changes were made to provide more complete information about the manufacturer/importer and to enable consumers to choose the correct foundation (if any) to use with the mattress they purchase.

Each mattress set must bear a permanent label stating (1) the name of the manufacturer, or for imported mattress sets, the name of the foreign manufacturer and the importer; (2) the complete physical address of the manufacturer, and if the mattress is imported, the complete physical address of the importer or U.S. location where records are maintained; (3) the month and year of manufacture; (4) the model identification; (5) prototype identification number; and (6) a

certification that the mattress complies with the standard.

The final rule specifies the wording and format to be used in the compliance certification label, and requires that this information appear on a single label dedicated to this purpose. This will ensure that the information is not detracted from or minimized, and it will prevent potential confusion with state labeling requirements. The label information may be printed on the reverse side of the label in another language.

Included on the label must be a statement indicating whether the mattress meets the standard when used without a foundation, with a corresponding foundation or both alone and with a foundation. A mattress that is tested with a foundation may perform differently when used with a different foundation or without any foundation. Thus, it is important for consumers to know what foundation (if any) the mattress they are purchasing is intended to be sold with.

12. One of a Kind Exemption (§ 1633.13)

The standard allows an exemption for a one-of-a-kind mattress set if it is manufactured in response to a physician's written prescription or manufactured in accordance with comparable medical therapeutic specifications. This provision is unchanged from the proposal and is also present in the 16 CFR 1632 mattress standard.

F. Effectiveness Evaluation

As discussed in the NPR, CPSC staff conducted an effectiveness evaluation to assess the potential effectiveness of the proposed standard in addressing deaths and injuries resulting from mattress/bedding fires. The evaluation was based primarily on review of CPSC investigation reports that provided details of the occupants' situations and actions during the fire. Staff reviewers identified criteria that affected the occupants' ability to escape the fires they had experienced. The staff used these criteria to estimate percentage reductions in deaths and injuries expected to occur under the much less severe fire conditions anticipated with improved designs of mattresses that would comply with the standard. The staff then applied these estimated reductions to national estimates of mattress/bedding fire deaths and injuries to estimate numbers of deaths and injuries that could be prevented with the standard. [3]

The staff's effectiveness estimates in the NPR were based on full-scale tests of early experimental mattress designs incorporating strong, but not necessarily cost-effective barrier systems. These mattress tests were conducted with burning bedclothes so that the fires produced could be used to estimate changes in deaths and injuries expected to result from the standard. In the past few years, mattress designs and materials have evolved with manufacturers now producing mattresses to meet California TB 603. New fire barrier products have been introduced, mattress designs have been more closely engineered to achieve the required performance, and single-sided mattresses have become an increasingly larger and more significant portion of the residential market. [1]

In evaluations that the staff conducted after publication of the NPR, the staff found that when mattresses are closely designed to the performance requirements in the final standard, as is expected as the industry develops their new products, flashover conditions could occur earlier than previously measured with experimental and initially over-engineered designs. Staff accounted for this observed behavior by reducing the effectiveness estimates for the final standard adjusting for the effect on some occupants. The standard's limit on the early contribution of the mattress to the fire (15 MJ in the first 10 minutes) will help to maintain tenable conditions early in the fire and allow for timely discovery and escape from growing fire conditions. [1&2]

The most recent national fire loss estimates indicated that mattresses and bedding were the first items to ignite in 15,300 residential fires attended by the fire service annually during 1999–2002. These fires resulted in 350 deaths, 1,750 injuries and $295.0 million in property loss each year. Of these, the staff considers an estimated 14,300 fires, 330 deaths, 1,680 injuries, and $281.5 million property loss annually to be addressable by the standard (i.e., of the type that the standard could affect based on the characteristics of the fire). [3]

For the final rule, the staff has reviewed the fire loss data and updated its effectiveness evaluation to account for the observations discussed above. The staff's analysis is explained in detail in the memorandum ''Updated Estimates of Residential Fire Losses Involving Mattresses and Bedding.'' [3]

CPSC staff estimates that, overall, the standard may be expected to prevent 69 to 78 percent of the deaths and 73 to 84 percent of the injuries presently occurring in addressable mattress/bedding fires attended by the fire service. Applying these percentage reductions to estimates of addressable mattress/bedding fire losses noted above, staff estimates potential reductions of 240 to 270 deaths and 1,150 to 1,330 injuries annually in fires attended by the fire service when all existing mattress sets have been replaced with mattress sets meeting the new standard. There may also be reductions in property damage resulting from the standard, but data are not sufficient for the staff to quantify this impact. [3]

G. Inter-Laboratory Study

Before publication of the NPR, an inter-laboratory study was conducted with the support of the SPSC, NIST, and participating laboratories to explore the sensitivity, repeatability, and reproducibility of the NIST test method. However, only a preliminary analysis of the results of the study was available prior to the NPR. A more detailed analysis is now available. See Damant, G./Inter-City Testing and Consulting Corporation & Sleep Products Safety Council (2005). *Developing an Open-Flame Ignition Standard for Mattresses and Bed Sets (Report on a Precision and Bias Evaluation of the Technical Bulletin 603 Test Method*). Alexandria, VA: Sleep Products Safety Council. The analysis is summarized below.

All of the participating labs conducted multiple tests of eight different mattress designs. The mattress designs varied critical elements (e.g., the barrier—sheet or high-loft, the type of mattress—single or double-sided) and the style of mattress (e.g., tight or pillow top). [2]

A detailed statistical analysis of the test data suggests neither unreasonable sensitivities nor practical limitations of the NIST test protocol. The results were not affected by substantially varying the parameters (primarily associated with possible test facility and operator errors) selected for the sensitivity study. The data indicate that the specified ignition source is severe enough and the test duration long enough to allow a valid/realistic evaluation of mattress set performance. [2]

The data showed some significant differences in the test results reported by the participating laboratories, and a variety of factors possibly influenced these differences. However, the study suggests that, when the test procedures are correctly followed, it is the combined characteristics and resulting behavior of the mattress components chosen, mattress design, and consistency of the manufacturing processes that determines the test outcome. Observations from the study emphasize the importance of controlling components, materials, and methods of assembly. Quality assurance procedures,

standardized testing, written records, and visual inspections are all means for assuring, verifying, and controlling consistency of production. Environmental conditions required for tests have also been tightened in the standard. [2]

H. Response to Comments on the NPR

As discussed above, the Commission published an NPR in the **Federal Register** on January 13, 2005, proposing a flammability standard addressing open flame ignition of mattresses. 70 FR 2470. During the comment period, the Commission received over 540 comments from consumers, businesses, associations and interested parties representing various segments of the mattress industry and consumers. In addition, comments were presented by interested parties at a public hearing concerning the mattress NPR that the Commission held on March 3, 2005. Additional comments have also been submitted since the close of the comment period.

Commenters who generally supported the proposed rule provided comments regarding definitions, testing procedures, recordkeeping requirements, importer/renovator responsibilities, and other related issues. Those opposed to the standard expressed concerns about the health effects of flame retardant chemicals needed to help mattress sets comply with the performance requirements. [18 & 19] Significant issues and the Commission's responses are summarized below. More detailed responses and responses to minor comments are discussed in the staff's briefing memoranda.

1. Scope and Definitions of the Standard

a. *Comment.* One commenter noted inconsistency in use of the terms ''mattress'' and ''mattress set,'' which could lead to confusion. The commenter suggested using and defining ''mattress set'' to refer to mattresses to be tested both with and without a foundation.

Response. CPSC has now defined ''mattress set'' to include mattresses labeled for sale alone and mattresses labeled for sale with a foundation, depending upon the manufacturer's intentions, to resolve the problem of inconsistency, as well as reduce wordiness. The revised definition also makes clear that foundations need not meet the test requirements by themselves. The term is used throughout the final standard.

b. *Comment.* Two commenters stated that the distinction between prototypes that need to be tested and those that do not is unclear. They suggest using a different term, such as ''Model,'' for prototypes that do not need to be tested.

Response. CPSC agrees that using a different term to refer to prototypes that are not required to be tested would prevent confusion. ''Subordinate prototype,'' defined at § 1633.2(p), is used for an untested prototype based on either a qualified or confirmed prototype.

c. *Comment.* One commenter recommended that the term ''prototype developer'' be defined to permit third parties, such as component suppliers, to design and test prototypes that can be used by mattress manufacturers.

Response. The standard does not prohibit entities other than mattress manufacturers from designing and testing mattresses for pooling purposes. For purposes of clarity a definition for ''prototype developer'' has been added to the standard to describe a third party providing this service to the industry. If such an entity designs a prototype for a mattress manufacturer, the manufacturer would still be responsible for causing qualification testing of and maintaining all records required for that prototype, including those documenting the prototype qualification. If the prototype developer designs and qualifies the prototype, the manufacturer would have to do the required confirmation test.

d. *Comment.* Commenters questioned the applicability of the proposed standard to mattresses used in recreational vehicles and the lodging industry.

Response. The Commission intends for this standard to apply to essentially the same mattresses as are currently regulated under Part 1632. Mattresses are ''products'' under the Flammable Fabrics Act. However, motorized RVs that are subject to the National Highway Traffic Safety Administration's FMVSS No. 302 would not be subject to the Commission's mattress standard.

Interpreting the 1632 mattress standard, the Commission's staff and Office of General Counsel have expressed the view that the flammability standards issued under the FFA (including 1632) are applicable to mattresses, carpets and rugs when installed in travel trailers, 5th wheelers and slide-in campers, but travel trailer cushions that have dual purposes as mattresses and seat cushions would not be considered mattresses.

Mattresses used in the lodging industry are subject to the 1632 mattress standard. Commenters have not presented any reasons why these mattresses should be treated differently under the new Part 1633 regulation addressing open flame ignition. In the absence of such information, the Commission believes it is appropriate to continue to include mattresses used in the lodging industry as subject to Commission mattress flammability rules.

2. Technical Requirements/ Specifications

a. *Comment.* Several commenters recommended changing the specified burner hole size to the #53 drill size (1.50 mm) used on production burners and limit the time between removal of the sample from conditioning and the start of the test.

Response. As discussed earlier in this preamble, NIST recently evaluated peak heat fluxes from two versions of gas burner designs, the original and the commercial burners with larger holes. The study showed that the burners with the larger holes do a better job of meeting the target peak flux levels of bedclothes than do the original burners with the smaller holes. Accordingly, the Commission has revised the standard to specify a nominal burner hole size of 1.50 mm, which corresponds to Grade 10 machining practice with a well formed #53 drill bit.

b. *Comment.* Several commenters recommended tightening sample conditioning and test area conditioning requirements.

Response. CPSC agrees that exposure of a mattress sample to the fire test room environmental conditions could likely have an impact on test results. Some laboratories have observed seasonal variations in test performance. It is reasonable, therefore, to require that testing of a specific conditioned sample should begin within a certain amount of time after removal from the storage conditions.

Based on NIST's evaluation of the effects of laboratory humidity in fire test performance, the Commission has revised the standard to require that testing must begin within 20 minutes after removal from the conditioning room. The sample conditioning requirements in § 1633.7(b) of the standard have been revised to specify an upper limit on the temperature. The temperature range must be greater than 18° C (65° F) and less than 25° C (77° F). The test area conditions must now be maintained at a temperature greater than 15° C (59° F) and less than 27° C (80.6° F) and a relative humidity less than 75 percent. These specifications will minimize environmental influences on test results.

c. *Comment.* Several comments requested the use of slightly modified test equipment. For example, one

commenter requested to use a modified technique to obtain the required burner offset from the specimen instead of the foot. Another comment pertained to using an alternate method of measuring the gas flow, rather than using a rotameter type of flowmeter.

Response. To address such issues that would not be expected to influence the test, the proposed standard has been revised to include a provision for the use of alternate apparatus in § 1633.7(k): Mattress sets may be tested using test apparatus that differs from that described in this section if the manufacturer obtains and provides to the Commission data demonstrating that tests using the alternate apparatus for the procedures specified in this section yield failing results as often as, or more often than, tests using the apparatus specified in the standard. The manufacturer shall provide the supporting data to the Office of Compliance, and staff will review the data and determine whether the alternate apparatus may be used.

3. Exposure to Flame Retardant Chemicals—Health Concerns

a. *Comment.* Numerous commenters stated that they were concerned about the possible toxicity of flame retardant (FR) chemicals in general. Other commenters, including manufacturers of mattresses or mattress components, stated that there are FR chemicals that can be used without presenting a hazard to consumers, workers, or the environment.

Response. In the view of the CPSC staff, there are inherently flame resistant materials and FR chemicals available that can be used to meet the standard and that are not likely to present a hazard to consumers, workers, or the environment. The CPSC and Environmental Protection Agency (EPA) staffs will continue to evaluate the potential effects of FR treatments to ensure that they do not present a hazard to consumers, workers, or the environment.

Mattress manufacturers would be free to choose the means of complying with the standard. Options available to manufacturers include the use of inherently flame resistant materials, FR barriers, and FR chemicals. To meet the standard, FR chemicals would most likely be applied to components inside the mattress, such as batting or barriers. However, FR chemicals might be applied to mattress ticking (cover fabric) in some cases. The potential risk presented by any chemical, including FR chemicals, depends on both toxicity and exposure. To the extent that FR chemical treatments remain bound to or within the mattress, exposure and its attendant risk would be minimized.

The CPSC staff has considered the potential chronic health risks associated with FR chemicals that may be used in mattresses to comply with the standard and continues to study the potential exposures to FR chemicals that may occur over the lifetime of a mattress. The Commission concludes that there are inherently flame resistant materials, FR barriers, and FR chemical treatments that can be used without presenting any appreciable risks of health effects to consumers.

The CPSC staff is also working with the EPA to ensure that the use of FR chemicals does not endanger consumers, workers, or the environment. EPA has broad statutory authority over chemical substances that address potential risks to consumers, workers, and the environment. EPA has several programs such as the Design for the Environment (DfE), High Production Volume (HPV) Chemical Challenge, and Voluntary Children's Chemical Exposure Program (VCCEP) to evaluate the potential hazards of chemicals, including flame retardants, to consumers, workers, and the environment. In addition, the CPSC staff is cooperating with EPA in developing a significant new use rule (SNUR) for FR chemicals that could be used to comply with CPSC or state flammability requirements for upholstered furniture and possibly mattresses. EPA's programs and statutory authority can be used to obtain additional toxicity or exposure data where needed, and complement the activities of the CPSC and the statutory authority of the Commission.

b. *Comment.* A number of commenters were specifically concerned about the toxicity of boric acid, which is used to treat cotton batting.

Other commenters, including manufacturers of mattresses, mattress components, and chemicals, noted that boric acid has been used in mattresses for many years and that their employees have not suffered any ill effects. They noted that the EPA also recently increased its reference dose (RfD) for boric acid. (This means that a greater daily exposure to boric acid is considered acceptable by EPA.)

Response. After publication of the NPR, the CPSC staff performed studies to estimate the potential for exposure as well as the potential health risk associated with the use of boric acid as a flame retardant. [4&11] The staff's studies and analysis applied conservative assumptions in areas of scientific uncertainty, that is, assumptions that may overestimate, rather than underestimate, exposure and risk. The staff concluded that the estimated exposure to boric acid was below both the EPA's revised RfD and the updated CPSC staff's Acceptable Daily Intake (ADI). Thus, boric acid is not expected to pose any appreciable risks of health effects to consumers who sleep on treated mattresses.

c. *Comment.* One commenter specifically mentioned fiberglass as a potentially hazardous FR treatment due to inhalation of glass fibers.

Response. The type of fiberglass used in textiles and FR barriers, ''continuous filament,'' is not considered hazardous.

d. *Comment.* Some commenters argued that the risk of dying in a fire is lower than the risk of adverse health effects from exposure to FR chemicals in mattresses.

Response. The commenter provided no data on mattress exposures to support this assertion. There are approximately 15,000 fires per year in the U.S. in which mattresses or bedding are the first item ignited, resulting in about 1,750 injuries and 350 deaths per year. The Commission has concluded that the risk of injury or death in a fire involving mattresses or bedding is substantial.

The CPSC has studied the potential exposures and chronic health risks associated with FR chemicals that may be used in mattresses to comply with the standard. The results of these studies indicate that there are a number of commercially available FR-treated barriers that can be used to meet the standard without presenting any appreciable risks of health effects to consumers.

e. *Comment.* Numerous commenters stated that they have multiple chemical sensitivity (MCS), allergies, or other health conditions that could be exacerbated by exposure to FR chemicals.

Response. The CPSC concludes that there is no evidence to suggest that FR chemical exposures from mattresses would contribute to the causation or exacerbation of allergies, asthma, or multiple chemical sensitivity (MCS). For the most part, the materials and FR chemicals that will be used to comply with the standard do not share the characteristics of the types of exposures associated with the conditions noted by the commenters.

MCS is a ''condition in which a person reports sensitivity or intolerance (as distinct from an allergy) to a number of chemicals and other irritants at very low concentrations.'' The chemicals include both recognized pollutants—for example, formaldehyde, volatile organic

compounds, and environmental tobacco smoke—as well as agents generally considered to be innocuous, such as fragrances. Health professionals and biomedical scientists differ in their views regarding the underlying causes and physiological processes of this condition. Non-allergic asthma and rhinitis are generally associated with exposure to respiratory irritants such as combustion products, environmental tobacco smoke, dusts, and solvents, while allergic asthma and rhinitis symptoms are most often associated with exposures to airborne biological substances, such as animal dander, insect wastes, molds, and pollen. The FR materials or chemicals under consideration are generally non-volatile, are not associated with fragrances or odors, and are not derived from biological materials.

Furthermore, the potential risks presented by FR chemicals depend on both toxicity and exposure. In most cases, FR chemicals would be applied to components inside the mattress, such as batting or barriers. To the extent that FR chemical treatments remain bound to or within the mattress, exposure and its attendant risk would be minimized.

f. *Comment.* Some commenters claimed that FR chemicals may cause sudden infant death syndrome (SIDS).

Response. The CPSC disagrees with the claim that antimony compounds or other FR chemicals may cause sudden infant death syndrome (SIDS). Following a four-year study in the United Kingdom and reviews by a number of expert panels in the UK and the U.S., the expert panels concluded that there is no credible evidence that antimony compounds or any other FR chemicals contribute to SIDS.

g. *Comment.* Some commenters were specifically concerned about the toxicity of polybrominated diphenyl ethers (PBDE's), including decabromodiphenyl oxide (DBDPO).

Response. PBDE's are a family of FR chemicals that have been used in some components of consumer products. Octabromodiphenyl ether (octa-BDE) was a relatively minor product that was never used in mattresses or upholstered furniture. Pentabromodiphenyl ether (penta-BDE) is no longer in use. It was one of the primary FR treatments for flexible polyurethane foam (PUF), which is used in mattresses, upholstered furniture, and other applications. However, most non-California residential mattresses and upholstered furniture do not require FR-treated PUF to pass current flammability requirements. The European Chemicals Bureau concluded that there is no reason to ban DBDPO. The U.S. EPA and the European Chemicals Bureau continue to review the potential environmental effects of DBDPO. The CPSC staff evaluated risks associated with mattress barriers containing DBDPO and concluded that DBDPO used in barriers for mattresses is not expected to pose any appreciable risk of health effects in consumers. [1&13]

h. *Comment.* Some individuals commented that there is no guidance for manufacturers to consider toxicity and exposure when selecting FR chemicals.

Response. Under the FHSA, manufacturers are responsible for ensuring that their products either do not present a hazard to consumers or, if they are hazardous, that they are properly labeled according to the requirements of the FHSA. In 1992, the Commission issued chronic hazard guidelines to assist manufacturers in complying with the FHSA (16 CFR 1500.3(c)(2). The guidelines address carcinogenicity, neurotoxicity, reproductive and developmental toxicity, exposure, bioavailability, and risk assessment.

i. *Comment.* One manufacturer commented that the CPSC staff should use realistic exposure scenarios, rather than overly conservative ones.

Response. In assessing chronic health hazards, the goal of the CPSC staff is to determine whether ''reasonably foreseeable handling and use'' may be hazardous to consumers. Therefore, the staff generally attempts to make best estimates of exposure under realistic conditions. However, in the absence of adequate data, the staff applies ''conservative'' assumptions, that is, assumptions that might overestimate, rather than underestimate risk.

The CPSC chronic hazard guidelines describe various approaches to exposure assessment. Direct measures of exposure such as field studies are generally preferred over laboratory studies and mathematical modeling. However, field studies are not always practical for technical or economic reasons. Thus, the staff frequently relies on a combination of laboratory data and mathematical models.

The CPSC staff developed laboratory methods and exposure scenarios to assess the potential exposure to FR chemicals in mattresses. These methods are conservative in that they may overestimate, rather than underestimate, the potential risk.

4. Durability of Flame Retardant Chemicals—Fire Performance

Comment. Several commenters recommended requiring performance tests to assure the durability of flame retardant chemicals and barrier performance after exposure to moisture. Some provided test data to support their concerns. Other commenters provided data from tests of used mattresses taken out of service, indicating they still met applicable standards.

Response. The data provided by commenters were either not relevant (tests using smoldering cigarettes) or based upon severe exposure of barrier materials, apart from the mattress, before testing. The staff sought and obtained new test data, supplied by manufacturers of barrier products and by NIST, to provide a limited evaluation of effects of moisture on flammability behavior. This evaluation does not support requiring specific durability tests for barrier components. NIST examined the fire performance of two mattress designs that used different barrier materials/systems made with water soluble flame retardants. NIST fire tests were conducted after the mattress sets were exposed to 10 localized, wetting and drying cycles. The effects of this severe wetting exposure scenario did not change the overall flammability performance of the mattress sets. In addition, even if exposed areas have decreased fire resistance, the tests suggest that the remainder of the mattress should retain its improved flammability performance, especially the performance expected early in the fire. Since localized wetting, as in bedwetting, is anticipated to be the most likely exposure of a mattress to water in real-world applications, it appears unnecessary to add durability test requirements to the standard to account for mattress designs that incorporate barrier systems that use water-soluble flame retardants.

5. Effective Date

Comment. Commenters suggested a variety of effective dates for the final rule ranging from immediate implementation to coinciding with regular model changes (January and July) and 18 months from final publication.

Response. The standard provides an effective date of July 1, 2007, which is the earlier of January or July that follows twelve months after publication of the **Federal Register** notice. This date would coincide with regular model/style changes and thus make it easier for all producers, especially small producers outside of California who are not producing complying mattress sets, to update their styles and produce complying mattress sets.

All national producers that sell mattresses in California already have developed the production technology and conducted the testing required to

meet California TB 603, which is very similar to the Commission's standard. One of them is already selling mattresses complying with performance requirements of the Commission's standard nationwide. Three of the top four producers are selling complying mattress sets representing between 15 to 20 percent of their total output. Smaller companies not based in California may be behind in their design, production, and testing efforts. However, the Commission believes that an effective date of one year plus time to the next model introductions provides enough time for all manufacturers to transition to producing and selling compliant mattresses.

6. Labeling

a. *Comment.* One commenter urged the Commission to require the labels of imported mattresses to bear the foreign manufacturer's name and full address, including country, as well as the importer's name and full address.

Response. CPSC agrees that such information should be present on the mattress set label and has revised § 1633.12 (a) of the standard accordingly.

b. *Comment.* One commenter referred to the Textile Fiber Products Identification Act, which is administered by the Federal Trade Commission (FTC) and requires, among other things, that mattresses made with ''reused stuffing'' be labeled so, and suggested that CPSC coordinate with FTC to allow the disclosure to appear on the label with the other information required by the standard.

Response. Labeling of mattresses is governed by several organizations, including CPSC, FTC, and individual states. Because of the informative nature and quantity of information needed, the standard has been revised to require the information specified in § 1633.12 to be displayed on a permanent, dedicated label in a prescribed format. Therefore, no other information apart from that required by the standard may appear on this label. This helps to insure prominence of consumer safety information and to prevent potential confusion with other labeling requirements.

c. *Comment.* One commenter suggested requiring renovated mattresses to bear a yellow label that would distinguish them from new mattresses, which traditionally bear white labels. In addition, the commenter recommended that renovated mattress labels be required to contain a statement indicating that compliance with the standard does not imply that the renovated mattress is sanitary or hygienic.

Response. The standard seeks to reduce injuries and deaths due to fires. It is not intended to address the sanitary condition of mattresses.

d. *Comment.* One commenter expressed concern that requiring a dedicated label might detract from the Sleep Product Safety Council's safety hangtag program, conflict with the state law labeling program, and negatively affect the aesthetics of the finished product. The commenter suggested allowing manufacturers to display the required information on the Sleep Products Safety Council's safety hangtag.

Response. CPSC has revised the labeling provision in the standard to (1) include intended usage information for the safety of the consumer, (2) require all information specified in § 1633.12 to appear on a dedicated label, and (3) permit the display of the consumer usage information in any other language on the reverse (blank) side of the label. Consumers must be able to identify the correct foundation, if any, to use with the mattress they purchase. With this intended usage information, consumers will understand that the mattress they purchase meets the requirements of the standard when used alone, with one or more specific foundation(s), or both.

Requiring the specified information to appear on a dedicated label has the benefit of (1) ensuring that such information is not detracted from or minimized, (2) avoiding potential conflict or confusion with state labeling requirements, (3) guaranteeing that the intended usage information is highlighted and presented in a consistent manner, and (4) allowing manufacturers the option of providing the intended usage information in another language on the back of the label. CPSC staff designed the required label to be as small as possible without compromising the clarity and effectiveness of the specified information.

e. *Comment.* Ten commenters recommended including in the standard a requirement that mattresses provide a label listing FR chemicals used or a statement warning of health risks.

Response. The staff has found that numerous FR materials are available that will enable mattresses to meet the standard without posing any appreciable health risks. Moreover, the FHSA itself would require a hazard warning label if a mattress did contain a hazardous substance as that term is defined in the FHSA. The potential health hazard associated with any chemical depends on both toxicity and exposure. A label stating the names of any FR chemicals used in the mattress would thus not in fact provide any useful information to the consumer because the mere presence of an FR chemical is not an indication that the mattress containing that chemical poses any health risk.

7. Preemption

Comment. The Commission received several comments concerning preemption. One commenter asked that the Commission explicitly state in the standard that the mattress standard would preempt both codified state rules and State common law claims that address the same risk of injury as the federal mattress standard. Other commenters asked that the Commission indicate that the standard would not preempt stricter state standards.

Response. The Commission's position on the preemptive effect of this final rule is stated in Section N. of this preamble.

8. Domestic Manufacturer/Renovator vs. Importer Responsibilities

a. *Comment.* Two commenters suggested making importer testing/recordkeeping responsibilities explicit. They suggested including language specifying that testing needs to be conducted (either qualification or confirmation) and records maintained for *each* foreign manufacturer if the importer is importing from more than one manufacturer.

Response. CPSC intends for the requirements of the standard to be the same for domestic manufacturers/renovators and importers: each is responsible for maintaining the appropriate qualification and confirmation test records for mattress sets they produce and/or import. These requirements have been clarified in the standard.

b. *Comment.* One commenter expressed concern that foreign manufacturers may circumvent testing requirements by drop-shipping directly to consumers. The commenter recommended adding a definition of ''importer'' that identifies domestic agents involved with selling or marketing the product to be drop-shipped as the responsible party.

Response. The CPSC does not believe that adding a definition of importer will suitably address the issue. Section 3(a) of the Flammable Fabrics Act already prohibits ''[t]he manufacture for sale, or the offering for sale, in commerce, or the importation into the United States, or the introduction, delivery for introduction, transportation or causing to be transported in commerce or for the

purpose of sale or delivery after sale in commerce * * *'' of any product violating a standard issued under its authority. This means that any party—including importers and other agents initially introducing goods regulated under the FFA into commerce—engaged in the foregoing actions with respect to non-complying products would be liable under the FFA.

In response to the commenter's concern, CPSC revised the standard to require each manufacturer to maintain a copy of the records demonstrating compliance at a U.S. location. Additionally, this location would be required to appear on the mattress label. Section 1633.11(e) of the standard has been revised to reflect these requirements.

9. Quality Assurance Requirements

Comment. One commenter suggested limiting the scope of the components and materials required to be controlled for quality assurance to only those that are critical to the flammability performance of the finished product.

Response. The Commission believes that it is premature to limit the scope of the quality control on incoming components and materials. The Commission could revisit this issue once significant experience with the standard is gained and the industry and CPSC have more confidence in the contributions of various components to the full-scale fire performance of mattress sets.

10. Recordkeeping and Sample Retention

a. *Comment.* One commenter recommended that the test and manufacturing records require the ''name and full address'' of the testing laboratory, as opposed to just the ''location.'' The same commenter likewise suggested substituting ''full address'' for ''location'' for both the manufacturer of the qualified prototype in the pooling confirmation test records and the suppliers in the prototype records.

Response. CPSC agrees that the name and complete address of the testing laboratory, as well as the complete addresses of the qualified prototype manufacturer and each material and component supplier, should appear in the respective records. This will provide more complete and accurate information for compliance purposes. Changes in § 1633.11 of the standard have been made accordingly.

b. *Comment.* One commenter urged the Commission to limit the records required under § 1633.11(d)(5) of the standard to only those relating to the testing and evaluations of components, materials, and assembly methods critical to flammability performance of the qualified prototype.

Response. Since it is too early to know exactly what components, materials, and assembly methods will influence the flammability performance of a mattress, CPSC does not believe it is appropriate to limit the types of records required under § 1633.11(d)(5) at this time. Moreover, these records will likely be used by manufacturers to demonstrate that a change in component, material, and/or assembly method will not degrade the flammability performance of a prototype, thus allowing the manufacturer to forgo testing and qualifying a new prototype. To that end, it is in the interest of the manufacturer to maintain a broader scope of such records.

c. *Comment.* Two commenters remarked that the requirement to keep physical samples of all materials used in each prototype is overly burdensome and impractical. The large numbers of samples would require significant storage space while the objective could be accomplished through test and quality certificates and other documentation already required in the quality assurance records.

Response. The requirement to maintain physical samples of prototype materials and components was included in the proposed standard as an added measure for manufacturers to verify that production mattresses match their representative prototype. Given that the prototype recordkeeping requirements already call for manufacturers to provide a detailed description of and specifications for each material and component used in every prototype, and given that this information may be used to reliably verify material and component consistency, the requirement to keep physical samples has been eliminated in the standard.

11. Consider Revoking Existing Cigarette Standard for Mattresses, 16 CFR Part 1632

Comment. Some commenters supported revoking the existing standard for cigarette ignition of mattresses and mattress pads. Others recommended careful review of risks, incident data, and benefits of the current standard before revocation is considered.

Response. On June 23, 2005, the Commission published an advance notice of proposed rulemaking for the possible revocation or amendment of the Standard for the Flammability of Mattresses and Mattress Pads (Cigarette Ignition). 70 FR 36357. That rulemaking will allow for a full evaluation of options to reduce unnecessary burdens while maintaining the safety afforded by the cigarette ignition standard. The Commission staff is also considering measures to reduce the short term testing burden created by the addition of a new mattress standard to an existing one.

12. Costs Associated With the Standard

Comment. Commenters expressed concerns about the increased costs of barrier materials needed to produce complying mattresses and increased costs to consumers (as much as $100 per mattress).

Response. Estimates of barrier and other resource costs for mattress producers are lower in the final regulatory analysis than those in the initial regulatory analysis and are expected to drop further as a result of technological developments and increased competition among barrier producers. Total costs are not expected to exceed $23.00 per mattress set.

The expected price increase for consumers was initially estimated to range from $23.00 to slightly less than $80.00. However, the final regulatory analysis updated the costs, which have declined because of technological advances and market competition. This means that the consumer price will increase by a mid-point estimate of $24.21 per mattress.

One national producer currently makes mattresses that would comply with the standard without increasing the price of its mattress sets. Competition for market share among producers will likely drive the price closer to the one charged by this national producer, which would make the likely increase even lower than that suggested by the $24.21 above.

13. Bedclothes Rulemaking

Comment. Some commenters expressed support for an additional rulemaking for bedclothes because of the significant role those products play in mattress/bedding fire losses. Other commenters shared concerns about the potential use of FR chemicals in such a rulemaking as well.

Response. On January 13, 2005, the Commission published an advance notice of proposed rulemaking for a standard to address open flame ignition of bedclothes. 70 FR 2514. Recent research has shown that bedclothes are a significant ignition source for mattress fires and can also generate a fire large enough to pose a hazard on their own. Laboratory tests also showed that fire performance of these products could be

improved. The environmental and health implications of compliance strategies, including FR chemicals, will be evaluated in the course of that rulemaking.

I. Final Regulatory Analysis

The Commission is issuing a rule establishing a flammability standard addressing the open flame ignition of mattresses. Section 4(j) of the FFA requires that the Commission prepare a final regulatory analysis for this action and that it be published with the final rule. 15 U.S.C. 1193(j). The Commission previously prepared, and published with the proposed rule, a preliminary regulatory analysis. The staff reviewed the preliminary regulatory analysis and updated it to prepare a final regulatory analysis. The following discussion was extracted from the staff's memorandum titled ''Final Regulatory Analysis of Staff's Draft Standard Final to Address Open-Flame Ignitions of Mattress Sets.'' [7]

1. Introduction

For 1999 to 2002, there were an estimated annual average of 15,300 fires where the first item ignited was mattress/bedding. These fires resulted in an annual average of 350 deaths, 1,750 injuries, and $295 million of property loss. As discussed elsewhere in this document, NIST conducted extensive research and developed a test methodology to test open flame ignition of mattresses. The Commission issued an NPR proposing a standard that incorporates the NIST test method.

California Technical Bulletin (TB) 603, which is based on the use of NIST test burners designed to mimic the local thermal insult (heat flux levels and duration) imposed by burning bedclothes, became effective in California on January 1, 2005. The California share of the market is estimated, by industry representatives, to be around 11 percent of the U.S. market. TB 603 requires all mattress/foundation sets, mattresses intended to be used without a foundation, and futons to meet the following pass/fail criteria: (1) The peak heat release rate (''PHRR'') does not exceed 200 kW during the 30 minute test, and (2) the total heat release does not exceed 25 mega joules (MJ) in the first 10 minutes of the test.

As of October 2005, one of the top four producers is selling mattress sets that comply with both TB 603 and the CPSC standard. The other three (of the top four) are producing complying mattress sets representing between 15 and 20 percent of their total output. This includes all mattress sets sold in California, plus other special orders, institutional mattresses and mattress sets sold in other states. Smaller manufacturers, however, may not produce mattress sets intended for sale outside California to meet TB 603 performance requirements. They are more likely to wait until a federal standard is adopted. The mattress industry and the International Sleep Products Association (ISPA) support the development of a mandatory federal standard (*Furniture Today,* May 10, 2004). A Federal standard would eliminate the uncertainty that may result from having different flammability standards for different states.

2. The Standard: Scope and Testing Provisions

The standard will apply to all mattress sets, where the term mattress set means either a mattress and foundation labeled by the manufacturer for sale as a set, or a mattress labeled by the manufacturer without any foundation. The term mattress means a ticking (*i.e.*, an outer layer of fabric) filled with a resilient material used alone or in combination with other products intended or promoted for sleeping upon. This definition is discussed further in section E.3. above.

A typical innerspring mattress construction might include ticking; binding tape fabric; quilt cushioning with one or more separate layers; quilt backing fabric; thread; cushioning with one or more separate layers; flanging; spring insulator pad; spring unit; and side (border) panels. Options for meeting the standard include the use of one or a combination of the following: fire resistant ticking; chemically treated or otherwise fire resistant filling products; or a fire blocking barrier (either a sheet style barrier, sometimes called a fabric barrier, or a high-loft barrier, sometimes called a fiber barrier). The fire blocking barrier is placed either directly between the exterior cover fabric of the product and the first layer of cushioning materials, or beneath one or more ''sacrificial'' layers that can burn without reaching the heat release constraints of the standard.

While the technology exists for producing a sheet-style fire blocking barrier, few, if any, producers are choosing it for protecting the mattress. The cost of using sheet barriers is higher than using high-loft barriers, since sheet barriers are thin and therefore could not be substituted for an existing foam or cushioning layer. There is also concern that some sheet barriers, unlike high-loft barriers, may reduce the comfort of the sleeping surface. There are already over twenty different vendors of fire resistant materials associated with the production of mattress sets, including barriers, ticking, foam, tape, and thread. These materials include chemically treated cotton, rayon, and/or polyester, melamine, modacrylic, fiberglass, aramid (Kevlar®), or some combination of them.

For each qualified prototype, three mattress sets must be tested and must pass the test requirements. To obtain a passing result, each mattress/set must pass a 30 minute test, where the PHRR does not exceed 200 kW and the total heat release does not exceed 15 MJ in the first 10 minutes of the test. If any of the sets fail, the problem must be corrected, the prototype must be retested and pass the test (in triplicate). Manufacturers may sell any mattress set based on a qualified prototype. Manufacturers may also sell a mattress set based on a subordinate prototype that has not been tested if that prototype differs from a qualified prototype only with respect to (1) mattress/foundation size (length and width); (2) ticking, unless the ticking of the qualified prototype has characteristics designed to improve performance on the burn test; and/or (3) the manufacturer can demonstrate, on an objectively reasonable basis, that a change in any component, material, or method of assembly will not cause the prototype to exceed the test criteria specified above.

Once a prototype has been qualified, other establishments (plants within the same firm) or independent firms may rely on it through a pooling arrangement. The pooling plant or firm is required to test one mattress set for confirmation testing. If that set fails, then the plant or firm will need to test another mattress set after correcting its production to make sure that it is identical to the original prototype. A pooling firm may sell other mattress sets that have not been tested by the pooling firm if they are based on a confirmed prototype and differ from the confirmed prototype only with respect to the three situations stated above.

3. Products and Industries Potentially Affected

According to ISPA, the mattress producers' trade organization, the top four producers of mattresses account for almost sixty percent of total U.S. production. In total, there are 571 establishments (as of 2003) that produce mattresses in the U.S., using the U.S. Department of Commerce NAICS (North American Industry Classification System) Code 33791 for mattresses. The top four producers account for about half of the number of all these

establishments. The number of establishments has been declining over time due to mergers and buy-outs. Total employment in the industry, using the NAICS Code 33791, was 24,545 workers in 2003.

The mattress manufacturing industry has three key supplying industries: spring and wire product manufacturing, broad-woven fabric mills, and foam products manufacturing. Depending on the type of fire resistant barrier chosen by different manufacturers, the demand for foam padding or non-skid fabric for mattresses might decline if it were replaced by the high-loft or sheet barrier in the construction of the mattress and foundation. This would be offset by an increase in the demand for the barrier. Fiberglass, melamine, and aramid producers may also be affected to the extent that they are used to produce fire resistant materials used in mattress production.

Manufacturers of bedclothes may also be affected by the standard. Sales of bedclothes may increase or decrease based on whether consumers view bedclothes as complements or substitutes for a new mattress set (complements are goods generally consumed together, substitutes generally substitute for each other). For example, if people tend to buy all parts of a new bed (mattress, foundation, and bedclothes consisting of a comforter, pillows, and sheets) at the same time, then an increase in the quantity of mattresses sold would cause an increase in sales of bedclothes. If, alternatively, people tend to have a fixed budget from which to buy all mattresses and bedding items, then an increase in the quantity of mattresses sold would lead to a decrease in sales of bedclothes. Also, if the decision to buy a new mattress (or mattress set) involves buying a mattress that is much thicker than the one currently in use, then consumers will most likely buy new sheets (and possibly matching pillowcases and other bedclothes items) to fit the new thicker mattress.

If the cost increase is relatively small or there is no resulting increase in the price of a mattress set, then the demand for bedclothes will only be affected if consumers place a higher value on the safer mattress and replace their current mattress sooner than they would have with no standard in place. An increased demand for the safer (and thicker, if the current mattress is relatively old) mattress will likely result in an increased demand for sheets that fit the newer mattresses. This effect, however, is not directly resulting from the adoption of the standard since the thickness of the mattress need not be increased by the presence of either type of barrier. It is the result of the increased utility some consumers may derive from the safer mattress and the consequent increase in demand for bedclothes. The increased demand for safer mattresses would most probably lead to an increase in sales and employment in the spring and wire products, broad-woven fabric, and foam products industries, as well as in the mattress and bedclothes industries.

Other producers that could potentially be affected, if the price change associated with producing compliant mattresses is significant, are those of other substitute products, like airbeds, waterbeds, * * * etc. that contain no upholstered material and would, therefore, not be covered by the standard. Their sales may increase as a proportion of total bedding products.

4. Characteristics of Mattresses Used in U.S. Households

The total number of U.S. conventional mattress shipments was 22.5 million in 2004 and is estimated to be 23.0 in 2005. Mattress shipments have grown at an average rate of three percent over the period 1981 to 2005. Unconventional mattresses (including futons; crib mattresses; juvenile mattresses; sleep sofa inserts; and hybrid water mattresses) are estimated to be about ten percent of the total market. This yields an estimated total number of mattresses produced domestically of 25.6 million in 2005. The value of mattress and foundation shipments in 2004, according to ISPA, was $4.10 and $1.68 billion, compared to $3.26 and $1.51 billion respectively in 2002.

The CPSC Product Population Model (PPM) estimate of the number of mattresses in use in different years is based on available annual sales data and an estimate of the average product life of a mattress. Industry representatives assert that the average consumer replaces a mattress set after ten years. A 1996 CPSC market study estimated the average expected life of a mattress to be 14 years. The PPM estimates the number of (conventional and non-conventional) mattresses in use in 2005 to be 237.0 million, using a 10-year average product life and 303.9 million, using a 14-year average product life. These two numbers are later used to estimate the pre-standard baseline risk and the expected benefits of the standard.

This analysis focuses principally on queen-size mattresses because they are the most commonly used. In 2004 queen-size mattresses were used by 34.9 percent of U.S. consumers. Following the queen-size are the sizes: Twin and Twin XL (29.3 percent), Full and Full XL (19.9 percent), King and California King (11.5 percent), and all other (4.4 percent). ISPA data reflect that the average size of a mattress is increasing. The average manufacturing price in 2004 was $182 for a mattress of average size and $90 for a foundation of average size. Hence the average manufacturing price of a mattress set was about $272 in 2004.

There are no readily available data on average retail prices for mattress sets by size. ISPA, however, reports that mattress sets selling for under $500 represented 34.6 percent of the marketing 2004. Mattress sets selling for between $500 and $1000 represented 41.1 percent of the market in 2004, compared to 39.2 percent in 2002.

5. Mattress/Bedding Residential Fires, Deaths, Injuries, and Property Losses: 1999–2002

The staff estimates that there were 15,300 average annual mattress/bedding fires for 1999–2002. Of these, 14,300 (or 93 percent) are potentially addressable by the standard. Average annual mattress/bedding deaths for 1999 to 2002 are 350. Of these, 330 (or 94 percent) are potentially addressable by the standard. Average annual mattress/bedding injuries for 1999 to 2002 are 1,750. Of these, 1,680 (or 96 percent) are potentially addressable by the standard. Average annual mattress/bedding property losses for 1999 to 2002 are 295 million dollars. Of these, 281.5 million dollars (or 95 percent) are potentially addressable by the standard.

6. Expected Benefits of the Standard

The expected benefits of the standard are estimated as reductions in the baseline risk of death and injury from all mattress fires, based on a CPSC staff study of fire investigations from 1999–2004. Risk reductions are then calculated on a per-mattress-in-use basis based on estimates of the number of mattresses in use. The monetary value of expected benefits per mattress is derived using estimates for the value of a statistical life and the current (i.e., 2005) average cost of a mattress fire injury. To derive the monetary value of expected benefits over the life of a mattress, the expected annual benefits are discounted (using a three percent discount rate), and then summed over the expected life of the mattress. The analysis considers mattress lives of 10 and 14 years.

The potential benefits of the standard consist of the reduction in deaths, injuries, and property damage that would result. Since the prime objective of the standard is to reduce the likelihood of flashover or increase the

time before flashover occurs, and not to reduce fires, changes in property losses associated with the standard are hard to quantify. Property losses are expected to decline but the extent of the decline cannot be quantified. Consequently, for purposes of this analysis, no reduction in property losses is assumed. That is, all expected benefits from the standard are in the form of prevented deaths and injuries. This underestimates net benefits, since there will likely be some benefits from reduced property losses.

The standard is expected to reduce the likelihood of flashover resulting from fires started by smoking materials or other ignition sources, as well as those started by open-flame ignition. Reductions in fires, injuries, and deaths will translate into societal benefits, as will be discussed in the benefit-cost analysis (Section 8 of this analysis).

Estimates of the effectiveness of the standard are based on a CPSC staff evaluation of in-depth investigation reports of fires (including details of the occupants' situations and actions during the fire) occurring in 1999–2004 in which a mattress or bedding was the first item to ignite, the fire was of the type considered addressable by the standard, and a civilian death or injury resulted. Most of the investigations also included documentation from the fire department that attended the fire. Some incident reports were initiated from death certificates with follow-up documentation from the fire department. This resulted in a total of 195 deaths and 205 injuries in the investigations to be evaluated. The distribution of mattress ignition sources was not representative of all fires involving mattresses and thus the data were weighted to match the NFIRS-based national fire data distributions.

Evaluations of the fire incidents by CPSC staff reviewers used the results of NIST testing (Ohlemiller, 2004; Ohlemiller and Gann, 2003; Ohlemiller and Gann, 2002) conducted to assess the hazard produced from burning mattresses and bedclothes. Specifically, the evaluations were based on the expectation that occupants in bed when the fire ignited but able to escape the burning bedclothes in the first three to five minutes faced a minimal hazard. Occupants in direct contact with burning bedclothes for a longer period (5 to 10 minutes) would be subject to potentially hazardous levels of heat release. If the burning bedclothes did not ignite other non-bedding items or produce flashover at this time, heat release would subside temporarily and then begin to increase as the involvement of the mattress increased.

These conditions would allow occupants 10 to 15 minutes to escape the room of origin before the situation in the room would become untenable. Since the standard is expected to slow the rate of fire spread and hence increase escape time, assuming that bedclothes do not contribute enough heat to pose a hazardous condition, it was assumed that people who were outside the room of origin at the time of ignition were unlikely to die in the fire, unless they entered the room later or were incapable of exiting on their own. The analysis focused on reduction of deaths and injuries because the standard is designed to limit fire intensity and spread rather than prevent ignition.

Each investigation was evaluated by CPSC staff reviewers to identify the features related to the occurrence of a death or injury once the fire was ignited. These included casualty age, casualty location when the fire started (at the point of ignition, in the room of origin but not at the point of ignition, or outside the room of origin), whether the casualty was asleep, or suffered from additional conditions likely to increase the time needed to escape, whether the casualty engaged in fighting the fire, and whether a rescuer was present. All of these conditions were used to determine a range for the likelihood that each individual death or injury would have been prevented had the standard been in effect. Percentage reductions of deaths (injuries) within subcategories of heat source and age group were applied to equivalent subcategories of the national estimates based on the NFIRS and NFPA data for 1999–2002. The estimated reductions per category were summed and the overall percentage reductions were calculated as the percent of addressable deaths (or injuries) that would have been prevented if the likelihood of flashover were reduced in the first 30 minutes and victims had 10 to 15 minutes of escape time.

The staff indicates that the standard is expected to reduce all addressable deaths from mattress/bedding fires by 69 to 78 percent and reduce all addressable injuries from mattress/bedding fires by 73 to 84 percent. Assuming that addressable mattress/bedding fire deaths and injuries account for the same percentage of residential casualties in 2003 and 2004 as in 1999 to 2002, the staff estimates that 240 to 270 deaths and 1150 to 1330 injuries in mattress/bedding fires attended by the fire service could have been prevented annually during the period 2000 to 2004.

The staff's analysis presents the estimated benefits of the standard, based on the expected annual deaths and injuries that are expected to be prevented by the standard. The analysis is conducted as if the standard had gone into effect in 2005. All dollar estimates are based on constant 2005 dollars. A discount rate of 3 percent and average expected lives of a mattress of 10 and 14 years are also assumed.

Based on the estimated number of mattresses in use for an average mattress life of 10 years (described in Section 4), the reduction in the risk of death during the first year the standard becomes effective equals 1.01 deaths per million mattresses (240 deaths divided by the estimated 237 million mattresses in use in 2005) to 1.14 per million mattresses (270 deaths/237 million mattresses). The mid-point estimate of the reduction in the risk of death the first year the standard becomes effective is, therefore, 1.08. The mid-point estimate of the reduction in the risk of injury, similarly calculated, equals 5.23, with a range from 4.85 to 5.61, injuries per million mattresses for an estimated 10-year life of a mattress. The mid-point estimates of the risk reductions for an estimated 14-year average life of a mattress are 0.84 deaths, with a range from 0.79 to 0.89, and 4.08 injuries, with a range of 3.78 to 4.38, per million mattresses.

Annual risk reductions resulting from the standard are used to derive the monetary benefits from reduced deaths and injuries. The estimated reduction in the risk of death is multiplied by the value of a statistical life (and divided by a million) to derive a first-year monetary estimate for the range of benefits from lives saved per mattress. Based on the existing literature, a value of a statistical life of five million dollars is assumed (Viscusi, 1993). The estimated reduction in the risk of injury is similarly used to derive the range of first-year monetary benefits from injuries prevented. The benefits from preventing an injury (the cost of an injury) in 2005 are estimated to average about $150,000, based on Zamula (2005) and Miller et al. (1993). The mid-point estimate of the first-year benefits associated with preventing deaths and injuries equals $6.17, with a range from $5.79 to $6.54 for an estimated mattress life of 10 years and $4.81, with a range from $4.52 to $5.10 for an estimated mattress life of 14 years.

Lifetime benefits are derived by projecting annual benefits for the life of the mattress and summing the discounted (at a rate of 3 percent) stream of annual benefits (measured in constant dollars). The number of mattresses in use is projected to grow at a rate of zero to three percent, based on the average growth rate for the 1981–

2004 period. Since the number of deaths and injuries are implicitly assumed to remain constant over time, a positive growth rate of mattresses in use implies a declining risk over time. The lower end of the ranges for estimated (10 and 14 years) lifetime benefits correspond to a 3 percent projected growth rate and the lower end of the effectiveness ranges. The upper end of the ranges for estimated (10 and 14 years) lifetime benefits correspond to a zero percent projected growth rate and the upper end of the effectiveness ranges.

For an expected mattress life of 10 years, the resulting mid-point estimate of expected lifetime benefits of saved lives associated with the standard equals $44.71, with a range of $39.37 to $50.05 per mattress. The corresponding mid-point estimate of benefits of prevented injuries equals $6.54, with a range of $5.67 to $7.41 per mattress. Hence, for an expected mattress life of 10 years, the mid-point estimate of the expected total lifetime benefits of a compliant mattress equals $51.25, with a range of $45.04 to $57.46 per mattress. For an expected mattress life of 14 years, the mid-point estimate of the total benefits equals $51.82, with a range of $44.30 to $59.34 per mattress. The sensitivity analysis section below examines how the results might change when a discount rate of seven percent is used.

7. Expected Costs of the Standard

This section presents the expected resource costs associated with the standard. Resource costs are costs that reflect the use of a resource that would have been available for other uses had it not been used in conjunction with the production of mattresses compliant with the standard. These costs include material and labor costs; testing costs; costs to wholesalers, distributors, and retailers; costs of producers' information collection and record keeping; costs of quality control/quality assurance programs; and compliance and enforcement costs. The effect on retail prices will be discussed in Section 8 of this Regulatory Analysis.

Material and Labor Costs. To comply with the standard, the construction of most mattress sets will include a barrier technology with improved fire performance. This barrier may be thick (high-loft) or thin (sheet). High-loft barriers are generally used to replace some of the existing non-woven fiber, foam, and/or batting material, leading to a smaller increase in costs than sheet barriers, which constitute an addition to production materials (and costs). Producers, therefore, are generally using the high-loft barrier for the panel (top of the mattress) and mattress and foundation borders. If they are using sheet barriers, they limit their use to the bottom of the mattress, replacing the no-skid non-FR (fire resistant) sheet used previously.

According to several barrier producers and mattress manufacturers, the price of a high-loft barrier that would make a mattress comply with the standard, is around $2.65 per linear yard, defined to have a width of 88 to 92 inches. Barrier costs range from $2.00 to $3.30, per linear yard. The high-loft barrier replaces the currently-used polyester batting, which costs an average of $ 1.15, with a range from $0.55 to $1.75, per linear yard. Hence, the net increase in the average cost attributed to the use of the high-loft barrier, referred to by the industry as the application cost, is $1.50, with a range from $0.25 to $2.75 per linear yard, which translates to a net increase in barrier-related manufacturing costs of $7.95, with a range from $1.33 to $14.58, for a queen-size mattress set.[3] The queen-size is used for all the cost estimates, because it is the mode size, used by 34.9 percent of consumers in 2004.

In addition to the increase in material costs due to the use of a barrier, costs will increase due to the use of fire-resistant (FR) thread for tape stitching. According to several thread producers, the cost of FR thread is $0.51 per queen-size mattress set, with a range from $0.41 to $0.60. Given that the cost of nylon (non-FR) thread is about $0.10 per queen-size mattress set, the average application cost of FR thread (net increase in costs due to the use of FR thread) per queen-size mattress set is $0.41, with a range from $0.31 to $0.50.

Costs may also increase due to slightly reduced labor productivity. Based on industry estimates of an average of two labor hours for the production of a queen-size mattress set, and a 10 percent reduction in labor productivity and an industry average hourly total compensation of $22.00, the cost increase due to reduced labor productivity is about $4.40. The reduced labor productivity results from the inexperience of the workers with the new production methods and should disappear when they become familiar with the products and techniques being used.

The standard requires producers to add a new label to both mattresses and foundations that identifies the prototype and the possible choice of foundations to be used with a specific mattress. This requirement is to ensure that consumers are buying a mattress set that was tested as a set, and would thus meet the requirements of the standard. This label is required to be separate from any other labels already being used and is estimated by industry representatives to result in an additional cost of $0.01 for both the mattress and foundation. This estimate includes both the material and labor needed to add the label.

The increase in the average materials and labor costs of a mattress set is thus equal to the sum of the barrier application cost per mattress set, thread application cost, labeling cost, and costs due to reduced labor productivity. This sum equals $12.77 ($7.95 barrier cost + $0.41 thread cost + $4.40 labor cost + $0.01 label cost). The estimated range for the materials and labor costs is $6.05 to $19.49.

Costs of Prototype and Confirmation Testing. The standard requires each mattress set qualified prototype to be tested in triplicate for prototype qualification. According to industry representatives, the cost of testing per twin-size mattress set may be about $500: the sum of the average cost of the materials and shipping ($100) and the cost of the use of the lab ($400). Hence, the cost of testing three mattress sets for prototype qualification equals $1500. Additionally, if some mattress set prototypes do not pass the first time, then the cost will be higher, because additional tests will be done after action is taken to improve the resistance of the prototype. If 10 percent of mattresses are retested, then the average cost of testing a prototype would be 10 percent higher, or $1650. This cost is assumed to be incurred no more than once per establishment for each prototype. It is expected that a qualified prototype will be used to represent a mattress construction (e.g., single-sided pillow top) with all subordinate prototypes using the same construction (with different sizes (lengths and widths) and different ticking materials) being based on the qualified prototype.

If companies pool their prototypes across different establishments or different companies, testing costs would be smaller as all but one of the firms/establishments producing to the specification of a pooled prototype may just burn one mattress (for the confirmation test) instead of three (for the qualified prototype test). Therefore, it is expected that the average cost of testing per mattress will be lower for firms and/or establishments that pool their results than for those that do not.

[3] This calculation is based on the assumption that a queen-size mattress set requires 5.3 linear yards of the barrier material to be used in the two (top and bottom) panels of the mattress and the borders of both the mattress and foundation. Some producers are able to use less than 5.3 linear yards, which reduces their cost per queen mattress set.

If manufacturers test every mattress construction (e.g., single-sided pillow top, double-sided pillow-top, tight-top, euro-top, * * * etc.), which is estimated, based on conversations with manufacturers, to average about twenty per manufacturer, for every establishment in a given year, then their average testing cost per mattress would approximately equal 82 cents ($1650* 20 styles * 571 establishments/23.0 million conventional mattresses) per mattress set for the first year of production. The standard would allow selling mattress sets whose (subordinate) prototypes differ from a qualified (or confirmed) prototype only with respect to size (length and width), and/or ticking material or other components that do not impact the fire performance of the prototype without testing the prototypes, to minimize testing costs to all manufacturers, especially those whose volume of output is small. Pooling testing results across establishments and/or firms will further reduce the average cost of testing per mattress set. On an annual basis, testing costs will be further reduced because qualified, confirmed, and subordinate prototypes need not be tested every year.

Cost of Information Collection and Record Keeping. In addition to prototype testing, the standard requires detailed documentation of all tests performed and their results including video or pictures; prototype or production identification number; date and time of test; and name and location of testing facility; test room conditions; and test data for as long as the prototype is in production and for three years after its production ceases. Manufacturers are also required to keep records of a unique identification number for the qualified prototype and a list of the unique identification numbers of each prototype based on the qualified prototype and a description of the materials substituted. Moreover, they are required to document the name and supplier of each material used in construction of a prototype. Additionally, they are required to identify the details of the application of any fire retardant treatments and/or inherently fire resistant fibers employed relative to mattress components.

This documentation is in addition to documentation already conducted by mattress manufacturers in their efforts to meet the cigarette standard. Detailed testing documentation will be done by the test lab and is included in the estimated cost of testing. Based on CPSC Office of Compliance staff estimates, all requirements of the standard are expected to cost an establishment about one hour per qualified prototype. Assuming that every establishment will produce 20 different qualified prototypes, the increase in record keeping costs is about $412.20 (1 hour × 20 qualified prototypes × $20.61 average total compensation per hour for office and administrative support workers) per establishment per year. (Note that pooling among establishments or using a qualified prototype for longer than one year will reduce this estimate.) This translates to an average cost of 1 cent per mattress set for an average establishment, with average output of 40,280 conventional mattresses.

Cost of Quality Control/Quality Assurance Programs. To ensure that all mattresses are produced to the prototype specification across all factories and over the years for which a production line exists, mattress manufacturers will need a thorough well-documented quality control/assurance program. The top 15 mattress producers (with a market share of 83 percent) have existing quality control programs which could be modified to fit the new standard with minimal additional costs. Smaller producers, whose quality control programs are less detailed or non-existent, will incur some incremental costs as a result of the standard. These incremental costs will be small for each manufacturer and less when measured per mattress set. (See the section on impact of the standard on small businesses for a description of their cost of quality control and quality assurance programs to them.)

Additionally, the standard encourages random production testing to assure manufacturers that their mattresses continue to meet the requirements of the rule, as a possible component of the quality control/quality assurance program. Assuming that an average of 3 mattress set constructions will be tested per establishment per year yields an estimated cost of production testing of about $1500. Based on this assumption, the estimated cost of testing mattress sets for quality assurance purposes, therefore, equals 3.7 cents per mattress ($1500/40,280) for an average establishment.

The labor needed to meet the quality assurance measures required by the standard is estimated by CPSC Office of Compliance staff to be 224 minutes per establishment per prototype per year. Assuming that every establishment will produce 20 qualified prototypes, the increase in labor costs associated with quality assurance requirements of the standard is about $1539 (224 minutes × 20 qualified prototypes × $20.61 average total compensation per hour for office and administrative support workers) per establishment per year. (Note that pooling among establishments or using a qualified, confirmed, or subordinate prototype for longer than one year will reduce this estimate.) This yields an average cost of 3.8 cents per mattress set for an average establishment, with average output of 40,280 mattresses per year. Hence expected total costs of quality assurance/quality control programs may average about 7.5 cents (3.7 + 3.8) per conventional mattress set per year.

Costs to Wholesalers, Distributors, and Retailers. An added cost of the standard is the increase in costs to wholesalers, distributors, and retailers in the form of additional storage, transportation, and inventory financing costs. Since a mattress complying with the standard will not be bigger than a similar mattress produced before the standard becomes effective, storage and transportation costs are not expected to increase. Inventory financing costs will increase by the average cost of borrowing money, applied to the wholesale price of a mattress over the average inventory holding time period. Since most mattress producers use just-in-time production and have small inventories, this additional cost will probably not exceed ten percent of the increase in production cost (which is the sum of material, labor, testing, record keeping, and quality assurance costs). A ten percent mark-up is, therefore, being used to measure the cost to wholesalers, distributors, and retailers. This yields a resource cost to wholesalers, distributors, and retailers equal to $1.37, with a range from $0.69 to $2.04, per mattress set. Retail prices may increase by more than the 10 percent mark-up. Section 8 discusses the impact of the standard on retail prices of mattress sets.

Costs of Compliance and Enforcement. Compliance and enforcement costs refer to the costs incurred by CPSC to ensure that manufacturers are complying with the standard. Based on past experience with the existing mattress standard, the estimated CPSC inspection time spent per location (establishment) equals 33 hours for inspection and 6 hours for sample collection. This yields a cost per inspection of about $1,722.63 (39 hours * $44.17, the average wage rate for CPSC inspectors). Additionally, compliance officers spend an average of 20 hours per case, making their cost equal to $1,071.20 (20 hours * $53.56, the average hourly wage rate for compliance officers). This yields an average compliance and enforcement total labor

cost of $2,793.83 per inspected establishment per year.

It should be noted that the expected cost per establishment, if less than one hundred percent of establishments are inspected every year, equals the cost per inspected establishment times the probability that a given establishment will be inspected. Though the probability that a given establishment will be inspected in a given year is not known, assuming that a third of all establishments will be inspected (i.e., about 190 establishments) yields a compliance and enforcement total expected labor cost of $931.28 ($2,793.83 * (⅓)) per establishment per year.

In addition to labor costs, CPSC will incur testing costs. It should be noted that the decision to collect samples after an inspection visit is made at the discretion of the investigator and, therefore an accurate assumption about the number of samples collected and sent for a burn test cannot be made. If, based on inspection, samples from 10 percent of all inspected establishments were to be collected and sent to a lab for a burn test, and if samples representing 5 (qualified, confirmed, or subordinate) prototypes are taken from each of these establishments, then the total cost of CPSC testing will be $142,750 (5 prototypes * $1,500 (the cost of testing 3 mattress sets for each qualified prototype) * 19 (10 percent of inspected establishments, equal to a third of 571)). These assumptions about frequency of testing yield an expected cost of testing per establishment of $250 ($142,750/571).

Therefore the expected total CPSC wage and testing costs associated with the standard per establishment per year equal $1,181.28 ($931.28 + $250.00). With an average production of 40,280 mattresses per establishment (23 million mattresses divided by 571 establishments), the average CPSC wage and testing costs equal 2.9 cents per mattress set ($1,181.28/40,280). These costs are expected to decrease over time as manufacturers learn the requirements of the standard.

Total Resource Costs. Therefore total resource costs (including material costs, labor costs, costs of prototype and confirmation testing, paperwork collection and record keeping costs, costs of quality control/quality assurance programs, production testing costs, costs to wholesalers, distributors, and retailers, and costs of compliance and enforcement) are estimated to be $15.07, with a range from $7.67 to $22.46, per mattress set. The section on the impact of the standard on small businesses and other small entities discusses how costs of testing and quality control/quality assurance programs may differ for small businesses and strategies that small manufacturers might adopt to reduce these costs.

Projected Future Costs. It is possible that costs associated with the standard will decline over time. A supplier of fire resistant barriers predicts that the price of the barriers will decline by 40 percent in the next two years, due to decreased uncertainty and increased competition. (They have already dropped significantly since TB603 was proposed.) The increase in labor costs due to decreased productivity is expected to be temporary and be reduced when workers get more training and/or the older machines get replaced with newer machines that are more capable of handling the FR thread and material used in fire resistant barriers. Moreover, as noted above, prototype testing costs are expected to decline after the first year of the standard.

The standard includes an effective date of July 1, 2007. The costs reported here are based on the assumption that supplier companies will be able to maintain existing capacity. If federal standards for bedclothes and upholstered furniture were mandated at the same time and input producers were not given enough time to increase their capacity, input prices would rise in the short-run because of increased demand for the FR material used by all three industries.

Unquantifiable Costs. A mattress manufacturer indicated that in response to an open-flame mattress standard, the number of models/styles produced may be cut by half. If this response is typical, then there may be a reduction in consumers' utility, because of the reduction in mattress types that they would have to choose from. Others indicate that there will be an aversion to producing double-sided mattresses, because it would be harder for them to pass the burn test. Double-sided mattresses possibly have a longer expected life than single-sided ones. To the extent that consumers prefer double-sided mattresses to single-sided mattresses, the shift away from producing double-sided mattresses imposes a non-monetary cost. Though unquantifiable, this reduction in choices of construction type and design is an added cost to consumers of the standard.

8. Benefits and Costs of the Standard

This section compares benefits and costs of the standard, presents a sensitivity analysis, and highlights the impact of the standard on retail prices, small businesses, children, and the environment. The sensitivity analysis examines the effect of changing some of the assumptions used earlier. The analysis shows that net benefits continue to be positive under a reasonable range of assumptions about the death and injury effectiveness of the standard, the reduction in injuries resulting from the standard, the value of a statistical life estimate, the discount rate, or the expected mattress life.

Using an expected mattress life of 10 years and a discount rate of 3 percent, the mid-point estimates for total benefits, costs, and net benefits per mattress set associated with the standard equal $51.25, $15.07, and $36.18 respectively per mattress set. The ranges for these estimates are $45.04 to $57.46, $7.67 to $22.46, and $22.58 to $49.78 respectively per mattress set. The lower end of the range for net benefits is derived by subtracting the upper end of the range for costs from the lower end of the range for total benefits. The upper end of the range for net benefits is derived by subtracting the lower end of the range for costs from the upper end of the range for total benefits. The whole range for net benefits is positive, which means that the expected benefits of the standard will exceed the expected costs. The sensitivity analysis, which allows the discount rate and the expected product life to vary, shows that net benefits remain positive when varying assumptions are made.

Assuming that all mattress sets in California would have complied with a standard that is very similar to CPSC's standard, expected aggregate lifetime costs, benefits, and net benefits associated with one year's production of mattresses are derived by applying the per unit cost and benefit of the standard to 89 percent of the estimated U.S. market for mattresses (equal to 25.6 million units). The sensitivity analysis section below shows aggregate costs, benefits, and net benefits of the standard assuming that current production shares would continue into the future without the anticipation of a federal standard.

Using a discount rate of three percent and an expected 10-year mattress life, aggregate benefits of the standard are expected to be $1,024 to $1,307 million ($45.04 to $57.46 per mattress times 89 percent times 25.6 million mattresses). The mid-point estimate for aggregate benefits is $1,166 million. The corresponding expected aggregate resource costs of the standard are $175 to $511 million ($7.67 to $22.46 times 89 percent times 25.6 million). The mid-point estimate for aggregate costs is $343 million. The resulting aggregate net benefits equal $514 to $1,132

million ($22.58 to $49.78 times 89 percent times 25.6 million). The mid-point estimate for aggregate net benefits is $823 million. For a mattress life of 14 years (and a 3 percent discount rate), the mid-point estimates for aggregate lifetime benefits, costs, and net benefits of the standard associated with one year of production are $1,179, $343, and $836 million respectively. The expected benefits of the standard will accrue for a long period of time and discounted net benefits will, therefore, be much greater than net benefits associated with only the mattress production in the first year the standard becomes effective.

Sensitivity Analysis. The previous analysis compares benefits and costs of the standard using expected mattress lives of 10 and 14 years, a discount rate of 3 percent, an expected effectiveness rate of the standard of 69 to 78 percent of deaths and 73 to 84 percent of injuries, an estimated value of a statistical life of 5 million dollars, and an estimated cost of injury of $150,000. It also assumes that only mattresses sold in California would have to, and therefore will, comply with TB 603, if producers are not anticipating a federal standard to be issued in the near future. This section examines the effect of changing any of these assumptions on the expected net benefits of the standard.

Comparing expected benefits and costs of the standard, it is clear that net benefits are expected to be positive (i.e., expected total benefits exceed expected costs) for an average mattress life of 10 or 14 years. Though increasing the expected mattress life from 10 to 14 years, while using the 3 percent discount rate, expands the positive range of net benefits, it does not affect the conclusion regarding net benefits per mattress set. A further increase of the expected life of a mattress similarly would not affect the estimate of net benefits. For example, using the Product Population Model estimate of the number of mattresses in use based on an expected mattress life of 18 years (equal to 354.2 million mattresses) yields net benefits of $21.76 to $54.31, with a mid-point estimate of $38.04, per mattress set using a discount rate of 3 percent.

Net benefits per mattress set are also positive using discount rates of 3 and 7 percent. Using a 3 percent discount rate, the mid-point estimate of net benefits per mattress set equals $36.18 for an average life of 10 years and $36.75 for an average life of 14 years. Using a 7 percent discount rate, the mid-point estimate of net benefits per mattress set equals $28.95 for an average life of 10 years and $26.93 for an average life of 14 years. Assuming a larger discount rate reduces net benefits, because future benefits reaped over the life of the mattress set contribute less to total discounted benefits.

Net benefits are based on an estimated value of a statistical life equal to $5 million. Changing the estimate used for the value of a statistical life does not have a major impact on the results. For example, if $3 million, the lower bound estimate in Viscusi (1993), is used as an estimate of the value of a statistical life, the mid-point estimate of net benefits becomes $18.30 per mattress set (using a 3 percent discount rate and an estimated mattress life of 10 years).[4] Alternatively, a $7 million estimate, the higher bound estimate in Viscusi (1993), yields a mid-point estimate of net benefits equal to $54.06 per mattress set (using a 3 percent discount rate and an estimated mattress life of 10 years).

Changing the estimate used for the cost of injury will have minimal impact on the results, because the share of benefits from reduced injuries is only 13 percent of total benefits. Hence, even if there were no reduction in injuries from the standard, the net benefits would be $29.64, with a range of $16.91 to $42.37 per mattress set (using a mattress life of 10 years and a 3 percent discount rate).

The analysis assumes that the effectiveness of the standard ranges from 69 to 78 percent for deaths and 73 to 84 percent for injuries. Even with a lower effectiveness rate, net benefits will remain positive. For example, assuming an effectiveness rate of 50 percent for deaths and injuries yields net benefits of $9.32 to $28.24 per mattress set, with a mid-point estimate of $18.78, and aggregate net benefits of $212 to $642 million, with a mid-point estimate of $427 million, from all mattress sets produced the first year the standard is mandated and sold outside California (using a mattress life of 10 years, a 3 percent discount rate, and the same effectiveness for injuries as used in the baseline analysis). Also, assuming a smaller number of deaths and injuries before the standard is mandated (a smaller baseline risk) would still result in positive net benefits. A 50 percent reduction in baseline death and injury risks yields net benefits of $0.09 to $20.16 per mattress set, with a mid-point estimate of $10.12, and aggregate net benefits of $2 to $515 million, with a mid-point estimate of $259 million, from all mattress sets produced the first year the mattress standard is mandated (using a mattress life of 10 years, a 3 percent discount rate, and the estimated effectiveness measures used in the baseline analysis).

The estimates of aggregate benefits, costs, and net benefits are based on the assumption that compliance before the promulgation of the standard was limited to California, which represents a market share of 11 percent. If, instead, we assume that current (October 2005) production shares would continue in the absence of the CPSC standard, the expected aggregate benefits, costs, and net benefits associated with the CPSC standard will decline. Assuming that the top four producers continue to produce the same percent of TB 603-complying mattress sets that they are now (one producing complying mattress sets nationwide, the other three producing 15 percent to 20 percent complying mattress sets), while all others produce complying mattress sets only in California, then the ranges for the mid-point estimates for aggregate benefits, costs, and net benefits are $952 million to $981 million, $280 million to $288 million, and $672 million to $692 million respectively.[5] These aggregate benefits are associated with one year's worth of mattress output. Summing all benefits over all mattress output over the time period during which the CPSC standard remains effective would result in much more positive benefits than indicated here.

Impact on Retail Prices. One of the top four mattress manufacturers in the industry has re-merchandised its product lines to lower the costs of other materials so that total costs (and prices) are the same as they were before the production of mattresses that comply with TB603. Other manufacturers have indicated that they will have to increase their price which, according to some manufacturers and based on reported traditional industry mark-ups, might translate to an increase in the retail price to consumers that could reach approximately four-fold the increase in manufacturer's costs. Hence the average

[4] The range for net benefits was derived by subtracting the upper end of the cost range from the lower end of the benefits range to get the lower end of the range of benefits and subtracting the lower end of the cost range from the higher end of the benefits range to get the higher end of the range for net benefits. Because of this method, both ends of the range for net benefits are a very unlikely occurrence.

[5] These ranges are based on the estimated market share of complying mattresses produced by the one producer selling complying mattresses nationwide (13.9 percent), the estimated market share of the remaining three of the top four producers who are selling some complying outside California (43.4 percent), and the estimated market share of all remaining producers (42.7 percent). With these three groups producing complying mattresses representing all output, 15 to 20 percent of output, and 11 percent of output (for California) respectively, the resulting U.S. market share of complying mattresses is 25.1 to 27.3 percent. (Estimated market shares are derived from Furniture/Today, May 30, 2005.)

increase in the price at which mattress manufacturers are willing to sell their products (supply price) will be anywhere between the price of a similar mattress without FR material and that price plus four times the increase in the costs of production. Given the presence of at least one company that will not increase the price, it is unlikely that the new average price will be close to the higher end of the range because of competition for market share among manufacturers.

The market (equilibrium) price is determined by the intersection of consumers' willingness to buy and producers' willingness to sell the product at different prices. The value the equilibrium price will take (relative to the price before the introduction of fire resistant mattress sets) will be affected by the change in the demand and supply curves for fire resistant mattress sets and their relative elasticities. Assuming that the demand curve is unaffected, the equilibrium price will reflect the price elasticity of demand (i.e. the sensitivity of the change in the quantity demanded to the change in price) as well as the shift in supply. In the short-run, consumers have a relatively elastic demand curve, because they can always postpone the purchase of a durable good, and therefore the increase in the equilibrium price is expected to be much lower than the increase in the supply price (what producers would want to sell the same number of mattress sets for). Because of the relatively high elasticity of demand, sales are likely to decrease in the short-run. In the long-run, the demand curve is less elastic, and therefore the equilibrium price and quantity (sales) will be higher than the short-run price and quantity.

Given the availability of mattresses whose retail prices will not increase and the competitive nature of the industry, it is possible that, on average, prices will rise by about twice the costs associated with the standard (*i.e.*, retail price mark-up will average about twice the increase in manufacturing costs). Under this assumption, consumers would pay an additional mark-up of 10 percent (the cost to wholesalers, distributors, and retailers) to 100 percent of total production costs, applied to the total production cost per mattress set. Hence the range for the price increase is $7.64 ($6.95*1.1) to 40.78(20.39*2), with a mid-point estimate of $24.21, per mattress set (compared to the price they would have paid for a current mattress set that does not comply with the standard). Assuming that the demand curve for mattresses is unaffected by the standard, some consumers will choose not to purchase (or at least delay the purchase of) a new mattress set. These consumers who delay or choose not to purchase a new set will not be getting the value (or benefits) that they would have gained from purchasing a new set. This loss, though difficult to quantify, is sometimes measured as a loss in consumer surplus (McCloskey, 1982).

It is unlikely, however, that the post-standard demand curve for mattresses will be the same as the current demand. Early 2004 market observations indicate consumer and retail enthusiasm about the fire resistant mattresses already available for sale (Furniture Today, April 26th, 2004). If this enthusiasm generally reflects consumers' preferences, then the demand for mattresses may increase. This would tend to offset any reduction in mattress sales and possible losses in consumer surplus.

Impact on Small Businesses and Other Small Entities. The increase in material and labor costs to meet the standard is not likely to be dependent on a firm's size and will therefore not disproportionately affect small businesses. The cost imposed disproportionately (per unit produced) on small businesses will be the cost of testing, information collection and record keeping and quality control/quality assurance programs. While these costs are estimated to be a little less than one dollar per mattress set per year for average-sized establishments, they could be substantially higher for small mattress manufacturers.

The rule allows two or more establishments (plants within the same firm) or independent firms to ''pool'' prototypes. This reduces the cost of testing because only one of the pooling firms is required to test three sets (for a qualified prototype) with all remaining firms testing one set (for a confirmation test). The standard would also allow selling mattress sets based on subordinate prototypes and differing from a qualified prototype only with respect to size (length and width), and/or ticking material or other components that do not impact the fire performance of the prototype without testing the prototypes, to minimize testing costs to all manufacturers, especially those whose volume of output is small. Moreover, costs could be reduced if a qualified, confirmed, or subordinate prototype is used to produce mattress set styles for longer than a year. Furthermore, firms with more than one establishment (or different firms) may be able to reduce costs by pooling their quality control programs over all establishments.

Use of prototype pooling across establishments and firms would ameliorate the impact of the standard on small businesses. By getting together across different states and regions, small manufacturers who do not share a common market (and therefore do not compete with each other) can resemble a large producer in their testing and quality control/quality assurance efforts and therefore reduce their costs per mattress set. It is also expected that some barrier suppliers would be willing to do the testing and quality control/assurance programs for small manufacturers in exchange for a small charge, which will be similar to the average cost per mattress for large businesses, because the volume of output will be large.

To reduce the impact of the standard on small businesses, CPSC eliminated the requirement of keeping physical samples. This reduced the average annual record keeping cost per establishment (assuming that they produce 20 different prototypes) from $767 to $412.

Impact on the Environment. The extraction, processing, refinement, and conversion of raw materials to meet the standard involve energy consumption, labor, and the use of potentially toxic chemicals. Most manufacturing has some impact on the environment, and manufacturing fire resistant mattresses is no exception. Because the standard is a performance standard, it does not restrict manufacturers' choice of fire resistant materials and methods that could be used in the production of mattresses. There appear to be several economically viable options to meet the standard that, based on available information, do not impose health risks to consumers or significantly affect the environment. (See discussion at Section M of this preamble.)

Impact on Children. Deaths and injuries among children constitute a substantial proportion of mattress-related fire losses, and of the potential benefits of the standard. A CPSC staff report, based on a field investigation study in 1995 to learn more about cigarette-ignited fires and open-flame fires, found that 70 percent of open-flame fires involved child play and that child play was involved in 83 percent of the 150 deaths of children less than five years of age. A National Association of State Fire Marshals 1997 study also indicated that 66 percent of the small open-flame ignitions were reportedly started by children under the age of 15 (21 percent by children under 5).

For virtually all of the fires started by children less than 15 years of age, the ignition was not witnessed by an adult

(Boudreault and Smith, 1997). Reducing the likelihood of flashover in the first 30 minutes of the fire may therefore benefit children disproportionately, as it allows enough time for adults to detect the fire and save young children in close proximity to the fire. Also children between 5 and 9 who sometimes do not cooperate with adults and run away from adults to other parts of the occupancy will have enough time to be found and rescued by an adult.

The Epidemiology staff's memorandum shows that, based on national fire estimates for the years 1999–2002, the standard would reduce deaths and injuries to children ages 5 and younger by 77 to 87 percent and 59 to 73 percent respectively. Deaths and injuries to children ages 5 to 14 were estimated to be reduced by 83 to 92 percent and 80 to 89 percent respectively. This represents a total of 70 deaths of children less than 15 years of age per year for the 1999 to 2002 period. It also represents 240 to 280 injuries to children less than 15 years of age for the same period.

9. Alternatives to the Standard

Alternative Maximum Peak Heat Release Rate (PHRR) and Test Duration. The initial California TB 603 proposal required the duration of the test to be 60 minutes with a maximum peak heat release rate (PHRR) of 150 kW. Following industry opposition to this proposal, the California Bureau of Home Furnishings and Thermal Insulation changed the criterion to a maximum of 200 kW PHRR in the first 30 minutes, the requirement for both the CPSC standard and the current TB 603.

Increasing the duration of the test and reducing the PHRR would, according to several input suppliers, increase the production costs to manufacturers of a queen mattress set by $15.42 to $46.88, with a mid-point estimate of $31.15, compared to non-complying products (i.e., those not conforming to the standard.) Adding the costs to wholesalers, distributors, and retailers, and of CPSC compliance efforts, yields a total resource cost of the stricter standard (150 kW and 60 minutes) of $17.00 to $51.61, with a mid-point estimate of $34.30. (The resource cost is the sum of the production cost, cost to wholesalers, distributors, and retailers, and CPSC compliance cost). This represents a marginal increase in average resource costs of $19.24 over the mid-point estimate of the costs associated with the final standard.

Potential benefits of the stricter standard could be higher than the standard, but the extent is uncertain. Given an effectiveness rate of the standard of 69 to 78 percent for deaths and 73 to 84 percent of injuries, the additional benefits of stricter test requirements are limited. Using the mid-point estimate of these effectiveness ranges (73.5 percent for deaths and 78.5 percent for injuries) and assuming that the stricter standard eliminates 50 percent of the remaining addressable deaths and injuries (i.e., it saves 46 additional lives and prevents 167 additional injuries), then an additional benefit of about $8.34 per mattress set is expected. This additional benefit may be lower than the expected associated costs of $19.24 and thus reduce net benefits.[6] Moreover, a small increase in net benefits may not justify the large increase in retail price that would result from a stricter standard.

Such increase in costs would likely result in consumers facing higher mattress set prices. Based on traditional industry mark-ups, the new price may reflect a two-to four-fold increase over the increase in production costs, depending on the relative elasticity of demand and supply for mattress sets. This yields a total increase in the average price of a queen mattress set of $30.84 (2 times the lower end of the range for the increase in production costs, equal to $15.42) to $187.52 (4 times the upper end of the range for the increase in production costs, equal to $46.88), with a mid-point estimate of $109.18. A bedding official estimated that the price increase resulting from the stricter standard may reduce sales by 25 percent or more (Furniture/Today, July 21, 2004).

The larger increase in prices (compared to the less strict test) and the resulting reduction in sales could drive some of the smaller producers out of business. (The stricter standard is more likely to require replacing some existing machines to accommodate the denser barrier material, which would be disproportionately more costly for smaller firms whose machinery is older and less sophisticated.) Since mattress sets are durable goods, one would expect a larger drop in sales in the short-run than in the long-run, as consumers choose to keep their old mattress sets longer than before. This would make the reduction in sales more pronounced in the short-run, increasing the likelihood that some firms may exit the market. Moreover, if a large number of consumers choose to extend the life of their mattress sets for a longer time period, it will take longer to achieve the benefits expected to be associated with the safer mattress sets.

Alternative Total Heat Released in the First Part of the Test. TB 603 requires the total heat released during the first 10 minutes of the test to not exceed 25 MJ. The stricter criterion of the standard (15 MJ in the first 10 minutes) reduces the expected size of the initial fire and hence allows consumers a greater chance to escape the fire and get out of the room, even if the room never reaches flashover. The effectiveness rates presented in the analysis are based on the stricter criterion. Using the TB 603 criterion (25 MJ in the first 10 minutes) would likely reduce estimated benefits (the estimated reductions in deaths and injuries), without having any significant effect on costs. According to several producers, mattress sets that use existing barrier technology release total heat that is far below the 25 MJ requirement of TB 603. Therefore, using the TB 603 criterion for the total heat released would not change costs but could potentially reduce the benefits and, hence, the net benefits of the standard.

Moreover, because of the small fuel load of ticking materials currently being used, the lower total heat release requirement allows the production of mattress sets based on a prototype that has not been tested as long as it differs from a qualified prototype only with respect to ticking and the ticking material is not part of the fire resistance solution. Requiring a test for every prototype with a different ticking was rejected by the CPSC because of the magnitude of the burden it would impose on small producers who do not produce large numbers of any one prototype and who would have been adversely affected by these requirements.

Alternative Testing Requirements. With certain exceptions discussed above, the standard requires prototype testing (of three mattress sets) before a manufacturer starts production of a given mattress design and a confirmatory test of one mattress for any other establishment or firm relying on that qualified prototype through a pooling arrangement. Though production testing is encouraged by the standard, it is not required as a possible component of the quality assurance

[6] These cost estimates (and the resulting marginal increase) should be viewed as approximate since no extensive tests of the barriers have been conducted for 60 minutes, as most manufacturers are focused on meeting the California requirements, which are less strict. Input suppliers generally do not assemble and test large numbers of mattresses, and may therefore underestimate reduced labor productivity and/or reduced output per machine (compared to a maximum PHRR of 200kW for a 30-minute test) due to handling the thicker, denser barrier. A number of mattress producers estimate that to meet the stricter standard, manufacturing costs would increase $50 to $70 for a queen-sized set (Furniture/Today, July 21, 2004).

program, and no specific frequency is set.

As an alternative, the Federal standard could, like TB 603, omit testing or prototype definition requirements. Without testing, however, it might be difficult for manufacturers to know whether their mattresses will comply with the standard. Alternatively, the standard could require production testing with a specified frequency. This specification, however, could result in unnecessary costs if they are not justified given the quality control measures generally undertaken by manufacturers in the absence of the standard. Requiring more tests per establishment, prototype, or enterprise would increase the estimated costs per mattress and could reduce net benefits.

Alternative Effective Date. The effective date in the standard is July 1, 2007. Given the length of time needed to ensure the availability of inputs for the production of barrier materials, availability of barriers for mattress producers, and a sufficient volume of inventories at retailers' showrooms, an earlier effective date may result in higher input costs to manufacturers. More importantly, it is expected that smaller manufacturers will be disproportionately affected, as they are more likely to wait to invest in development efforts until the technology is developed by larger firms, or until the standard becomes effective. The Commission chose the July date to coincide with the cycle for introduction of new mattress models, as suggested by the public comments.

A later effective date (longer than 18 months) could reduce expected net benefits as more fires, deaths, and injuries associated with mattresses would occur between the date of publication in the **Federal Register** and the date the standard becomes effective. The Commission is unaware of evidence that small manufacturers would benefit from extending the effective date further into the future. The staff requested comments from small businesses on the expected economic impact of the effective date and received one comment from a small business owner indicating that his firm would need more than twelve months to meet the standard. By the time the final standard takes effect, it would be nearly 18 months after publication of the **Federal Register** notice of the final rule. This should provide enough time for the commenter to transition to producing compliant mattress sets.

Taking No Action or Relying on a Voluntary Standard. If the Commission chose to take no action, only 11 percent of all mattress sets produced in the United States would have to comply with a standard that is very similar to the CPSC standard (California's TB 603). It is uncertain whether there will be any incentive for producers outside California to incur additional costs to produce mattress sets that would comply with California's TB 603. Consequently, how much, if any, of the remaining 89 percent of production would comply is uncertain. One of the largest four producers is currently producing mattress sets that comply with the CPSC standard. The other three top producers were selling complying mattress sets that represent between 15 to 20 percent of their total output in October, 2005. It is not clear, however, that any of these producers would continue to sell complying mattress sets outside California if they were not anticipating a future promulgation of a federal standard. Moreover, the absence of a federal standard may lead other states to develop their own standard, which would result in unnecessary burden (in terms of higher production costs) on manufacturers selling mattress sets in different states with different flammability requirements. Hence, expected aggregate net benefits associated with CPSC's standard are higher than the net benefits that result from taking no action and only relying on the California standard.

No effort has been undertaken to develop a voluntary standard. Furthermore, industry representatives support a mandatory standard to level the playing field among domestic producers (large and small) and importers. If a voluntary standard were developed, the economic burden would fall primarily on the larger firms (who would likely be the first to comply), their market shares could be reduced and benefits to consumers (in terms of reduced deaths and injuries) would likely decline accordingly.

Labeling Requirements Instead of Performance Standard. The Commission could require labeling on mattresses to warn consumers in lieu of a standard. Requiring warning labels is not considered an effective option for reducing the risk of fires. Since mattress labels are usually covered by bedclothes and may not be seen by the mattress users, mandating warning labels on mattress sets is unlikely to be an effective alternative to a performance standard. Moreover, fires started by children who cannot read or do not change the bed sheets will not be reduced by a labeling requirement. Hence, while labeling costs are probably negligible, labels alone are unlikely to reduce mattress fires significantly.

J. Paperwork Reduction Act

The standard will require manufacturers (including importers) of mattress sets to perform testing and maintain records of their testing and quality assurance efforts. For this reason, the rule contains ''collection of information requirements,'' as that term is used in the Paperwork Reduction Act, 44 U.S.C. 3501–3520. Therefore, the NPR discussed the paperwork burden of the proposed rule and specifically requested comments on the paperwork burden of the proposal. As discussed in section H above, the Commission received comments concerning testing costs (particularly for small producers) and generally on the costs of meeting the standard. As noted above, the Commission accepted several of the suggestions of commenters and has made some changes that should reduce the testing, quality assurance and recordkeeping burden for manufacturers (eliminated requirement for physical samples and timed the effective date to coincide with development of new models). The agency has applied to OMB for a control number for this information collection, and it will publish a notice in the **Federal Register** providing the number when the agency receives approval from OMB.

K. Final Regulatory Flexibility Analysis

1. Introduction

The Regulatory Flexibility Act (''RFA'') generally requires that agencies review proposed rules for their potential economic impact on small entities, including small businesses. 5 U.S.C. 603. Section 603 of the RFA calls for agencies to prepare and make available for public comment an initial regulatory flexibility analysis describing the impact of the proposed rule on small entities and identifying impact-reducing alternatives. Accordingly, the Commission published in the NPR a summary of an initial regulatory flexibility analysis that was prepared by the staff for the mattress proposed rule. The staff reviewed the initial regulatory flexibility analysis and prepared a final regulatory flexibility analysis as required by the RFA, which is summarized below. [8]

2. Need for and Objectives of the Rule

As discussed above, the standard is intended to reduce deaths and injuries resulting from residential fires involving mattresses ignited by open flame sources. The Commission estimates that the standard will substantially reduce the incidence and cost of these fires by minimizing the possibility of or

delaying the time for flashover conditions to occur.

3. Significant Issues Related to Small Business Raised by Comments on the NPR

Significant comments and the Commission's responses to them are discussed in section H of this preamble. Three issues in particular could be of concern to small business.

Effective date. One commenter suggested that the effective date should coincide with the time when manufacturers make regular model changes (January or July). The Commission is accepting this suggestion, and the standard provides for an effective date of July 1, 2007. This will make it easier for all producers, but especially small producers outside of California who are not producing complying mattresses, to update their styles and produce complying mattresses.

Expected cost of meeting the standard. The Commission received comments from companies concerned about the cost of complying with the standard, some from small businesses. As discussed in the regulatory analysis above, adding all other resource costs (including reduced productivity, cost of testing, record keeping, quality assurance costs and compliance costs) results in costs ranging from $7.67 to $22.46, with a mid-point estimate of $15.07, per (queen) mattress set. These cost estimates are expected to drop as a result of technological developments and increased competition among barrier producers.

Impact on small business. Six commenters addressed the impact on small businesses. The small producers expressed concern over the burden of testing costs and the feasibility of producing complying mattress sets in twelve months. The standard's testing, recordkeeping, and quality control/assurance requirements may have a disproportionate impact on small manufacturers because they are generally required per firm or per prototype and therefore would constitute a larger percent of total revenues, sales, and value added for the smaller firms. The standard's provisions for prototype pooling and selling variations of mattress sets without additional testing in certain situations should minimize the adverse impact on small manufacturers. Moreover, if a particular qualified, confirmed, or subordinate prototype was used to produce mattress sets for more than one year, then the testing cost would be reduced. The increase in time needed to produce a mattress set is expected to decline as workers get more experienced in producing the new models. Staff currently estimates the additional time (and wages) to average 10 percent, with the expectation that it will decline over time.

One small producer suggested that producers under a certain dollar volume be permitted to continue testing under 16 CFR 1632. However, this is not feasible because it would not protect consumers from the risk of fires, deaths, and injuries associated with open flame ignitions; it would also give small producers an unfair advantage over medium-sized producers.

The two barrier producers who commented on the NPR asserted that the costs of meeting the proposed standard are low, with one stating that there is ''zero economic impact on small business due to the wide breadth and variety of FR barrier products being offered to the market.'' A barrier producer suggested only testing one mattress set if the peak heat release rate (PHRR) does not exceed 50 megajoules (MJ) in the first 30 minutes. This suggestion would reduce the cost of testing to all producers, but might not provide an adequate measure of compliance with the standard.

4. Firms Subject to the Standard

The standard covers producers and importers of mattresses. There were 522 mattress firms and 607 mattress establishments in 2002, according to the Statistics of U.S. Businesses, Census Bureau data. (According to the Economic Census data, the number of mattress establishments was 571 for 2003.) All but the largest twelve firms had fewer than 500 employees. The U.S. Small Business Administration's Office of Advocacy defines a small business as one that is independently owned and operated and not dominant in its fields. A definition for the mattress manufacturing industry that is used by the Small Business Administration and is less subject to interpretation is a firm with fewer than 500 employees. The latter definition classifies 97.7 percent ((522–12)/522) of all mattress firms as small businesses.

Average employment per firm for the whole industry is 46.2 employees. Average employment for the 1 to 4 employees per enterprise group, which represents 22.41 percent of all firms, is 2.1 employees. Average employment for the less than 20 employees per enterprise group, which represents 60.54 percent of all firms, is 6.9 employees. Hence more than half of mattress firms have less than 20 employees.

5. Reporting, Recordkeeping and Other Compliance Requirements of the Standard and Possible Impacts on Small Businesses

The standard is a performance standard, not a design standard, and hence allows producers to choose the technology to meet the mattress set test requirements. With the exceptions discussed in the preamble above, all mattress sets subject to the standard must be tested in prototype and meet the specified performance requirements before production. Manufacturers are required to keep records of all tests performed and their results. The recordkeeping requirements are described in detail in the Regulatory Analysis in section I above.

The increase in the average materials and labor costs of a mattress set that meets the standard (estimated in the regulatory analysis to be $12.77, with a range of $6.05 to $19.49 per mattress set) is not likely to be dependent on a firm's size and will therefore not disproportionately affect small businesses. Larger firms are bearing all the capital investment costs of research and development, sharing some of these costs with input suppliers. Most smaller firms will simply buy from the suppliers a barrier solution, which has been tested extensively and is known to meet the standard. The price these smaller firms pay to cover the development and testing costs are borne by the supplier but will not have a disproportionate adverse impact on the small firms, because the price is not measured relative to their small output, but relative to the supplier's output. Other smaller firms may combine their development efforts to be able to benefit from dividing the costs over a larger number of firms. Finally, small mattress producers that do not assemble the mattress panels (the quilted assembly, including ticking, batting material, and barrier, used to cover the contents of the mattress construction), but buy them from a panel supplier are effectively combining all their output in a ''pooling'' arrangement. This is because the panel supplier will be responsible for including a barrier in the panel assembly and will pass that cost on to the mattress producers, again not disproportionately impacting the small producers who buy the already assembled panels.

The costs more likely to be imposed disproportionately (per unit produced) on small businesses will be the costs of testing, information collection and record keeping, and quality control/quality assurance programs. While the regulatory analysis estimates these costs

(including the cost of compensating office and administrative support workers for record-keeping and quality control/quality assurance requirements) to be less than one dollar per mattress set per year for average-sized establishments, they could be substantially higher for some small mattress producers. To reduce the impact on small businesses, the Commission eliminated the requirement of keeping physical samples, included in the proposed standard. This reduced the average record keeping cost per establishment (assuming that they produce 20 different prototypes) from $767 to $412.

6. Steps Taken To Minimize the Economic Impact of the Standard on Small Entities

As discussed above, the standard allows pooling of prototypes, which reduces the cost of testing because only one of the pooling firms is required to test three sets (for a qualified prototype) with all remaining firms testing one set (for a confirmation test). The standard also allows certain changes to be made without additional testing, which will minimize testing costs. Costs could also be reduced if a qualified, confirmed, or subordinate prototype is used to produce mattress set styles for longer than a year. Furthermore, firms with more than one establishment (or different firms) may be able to reduce costs by pooling their quality control programs over all establishments. Thus, pooling across establishments and firms will ameliorate the standard's impact on small businesses.

In response to a comment from the mattress producers' association, ISPA, the standard now provides an effective date of July 1, 2007. Providing an effective date that coincides with regular model/style changes will also minimize the impact on small producers because it will make it easier for all producers (but especially small producers outside of California who are not producing complying mattress sets) to update their styles and produce complying mattress sets.

Finally, elimination of the requirement for keeping physical samples will also reduce the impact of the standard on small businesses (it reduced the average record keeping cost per establishment (assuming that they produce 20 different prototypes) from $767 to $412).

Compared to all other alternatives considered, the standard minimizes the impact on small businesses.

7. Alternatives to the Standard

Alternative Maximum Peak Heat Release Rate (PHRR) and Test Duration. One alternative would be to issue a standard with criteria like those initially proposed in the California TB 603 proposal (a maximum PHRR of 150kW and test duration of 60 minutes). As discussed in the regulatory analysis, this would increase the resource costs to manufacturers (the total resource cost of a stricter standard (150 kW and 60 minutes) would result in a marginal increase in costs averaging $19.24 over the mid-point estimate of costs associated with the standard).

Potential benefits of a stricter standard could be higher than the standard, but the extent is uncertain and a stricter standard would likely reduce net benefits. Moreover, a small increase in net benefits may not justify the large increase in retail price that would result from a stricter standard. Also, the larger increase in prices could reduce sales and drive some of the smaller manufacturers out of business.

Alternative Total Heat Released in the First Part of the Test. CPSC's standard sets a limit of 15 MJ in the first 10 minutes while TB 603 limits the total heat released during the first 10 minutes of the test to 25 MJ. The Commission could adopt the criterion of TB 603. However, this would likely reduce estimated benefits without having any significant effect on costs. According to several producers, mattresses that use existing barrier technology release total heat that is far below the 25 MJ requirement of TB 603. Therefore, using the TB 603 criterion for the total heat released would not change costs but could potentially reduce the benefits and, hence, the net benefits of the standard.

Moreover, it would limit manufacturers' ability to change tickings without additional testing, thus increasing testing costs which would be particularly burdensome for small manufacturers who do not produce large numbers of any one prototype.

Alternative Testing Requirements. With certain exceptions discussed above, the standard requires prototype testing (of three mattress sets) before a manufacturer starts production of a given mattress design and a confirmatory test of one mattress if more than one establishment or firm are pooling their results. Though production testing is encouraged by the standard, it is not required. As an alternative, the Federal standard could, like TB 603, omit testing or prototype definition requirements. Without testing, however, it might be difficult for manufacturers to know whether their mattresses will comply with the standard. Alternatively, the standard could require production testing with a specified frequency. This specification, however, could result in unnecessary costs if they are not justified given the quality control measures generally undertaken by manufacturers in the absence of the standard. Requiring more tests per establishment, prototype, or enterprise would increase the estimated costs per mattress and could reduce net benefits.

Alternative Effective Date. The effective date in the standard is July 1, 2007. An earlier effective date could result in higher input costs to manufacturers. Moreover, it is expected that smaller manufacturers will be disproportionately affected, as they are more likely to wait to invest in development efforts until the technology is developed by larger firms, or until the standard becomes effective. The Commission chose the July date to coincide with the cycle for introduction of new mattress models, as suggested by the public comments.

A later effective date (longer than 18 months) could reduce expected net benefits. The Commission is unaware of evidence that small manufacturers would benefit from extending the effective date further into the future. The Commission received one comment from a small business owner indicating that his firm would need more than twelve months to meet the standard. By the time the final standard takes effect, it would be nearly 18 months after publication of the final rule in the **Federal Register**. This should be enough time for the all manufacturers to transition to producing compliant mattress sets.

Taking No Action or Relying on a Voluntary Standard. If the Commission chose to take no action, only 11 percent of all mattress sets produced in the United States would have to comply with a standard that is very similar to the CPSC standard (California's TB 603). How much, if any, of the remaining 89 percent of production would comply is uncertain, and without a federal standard other states may develop their own standards, which would result in unnecessary burden (in terms of higher production costs) on manufacturers selling mattress sets in different states with different flammability requirements. Hence, expected aggregate net benefits associated with CPSC's standard are higher than the net benefits that result from taking no action and only relying on the California standard.

No effort has been undertaken to develop a voluntary standard, and

industry representatives support a mandatory standard. If a voluntary standard were developed, the economic burden would fall primarily on the larger firms (who would likely be the first to comply), their market shares could be reduced and benefits to consumers (in terms of reduced deaths and injuries) would likely decline accordingly.

Labeling Requirements. The Commission could require labeling on mattresses to warn consumers in lieu of a standard. However, as discussed in the Regulatory Analysis above, requiring warning labels is not considered an effective option for reducing the risk of fires. Thus, while labeling costs are probably negligible, labels alone are unlikely to reduce mattress fires significantly.

8. Summary and Conclusions

The standard to address open-flame ignition of mattress sets will affect all mattress manufacturers. Almost all of these firms would be considered small businesses, using the Small Business Administration definition. Material and labor costs for all firms are expected to initially increase on average by $6.05 to $19.49, with a mid-point estimate of $12.77, per mattress set produced. These cost increases are expected to be borne equally by all firms and hence do not have a disproportionate adverse impact on the smaller mattress producers. These costs are expected to decline in the future due to improved technology of producing fire resistant materials and increased competition among suppliers of inputs used by the mattress industry.

Testing, record keeping, and quality control/quality assurance requirements may have a disproportionate impact on small manufacturers because they are generally required per firm or per prototype and therefore would constitute a larger percent of total revenues, sales, and value added for the smaller firms. To minimize the adverse impact on small manufacturers, the standard provides for prototype pooling among different establishments within the same firm and among different firms. The standard would also allow selling mattress sets based on subordinate prototypes that differ from a qualified prototype only with respect to size (length and width), and/or ticking material or other components that do not impact the fire performance of the prototype without testing the subordinate prototypes, to minimize testing costs to all manufacturers, especially those whose volume of output is small.

Compared to other effective alternatives considered, the standard minimizes the impact on small businesses. The only alternatives that might have a lower adverse impact on small business are labeling or doing nothing. Either alternative would be ineffective in reducing the fires, deaths, and injuries associated with mattresses.

L. Health Effects Issues Concerning the Use of Flame Retardants

As discussed above, some commenters raised concerns about possible health effects from flame retardants (''FR'') that manufacturers may use to meet the standard. The staff considered this issue when developing the proposed rule and prepared a preliminary qualitative assessment of the potential risk of health effects from exposure to FR chemicals that may be incorporated in mattresses to meet the proposed standard. Five FR chemicals/chemical classes (*i.e.*, antimony trioxide, boric acid/zinc borate, decabromodiphenyl oxide, melamine, and vinylidene chloride) were reviewed (at the time, data on potential exposures to FR chemicals in mattresses was not available). The staff concluded that, based on available information, FR chemicals and flame resistant materials were available that could be used to meet the proposed mattress standard without posing any unacceptable risk to consumers.

After publication of the NPR the staff continued its analysis of possible environmental or health effects. That analysis is provided in the staff's ''Quantitative Assessment of Potential Health Effects from the Use of Fire Retardant (FR) Chemicals in Mattresses,'' which is discussed below. [11] The staff provided this assessment for peer review. [16] The staff's report, the comments of the reviewers and the staff's responses are available on CPSC's Web site.

To quantify the amount of FR chemical(s) that may be released from the barriers, the staff conducted migration/exposure assessment studies on selected FR-treated mattress barriers. These barriers were treated with a variety of FR chemicals including: antimony trioxide (AT), boric acid, decabromodiphenyl oxide (DBDPO), melamine, ammonium polyphosphate, and vinylidene chloride. The exposure studies were conducted in three sequential phases to estimate exposures from dermal absorption, ingestion, and inhalation. The staff measured the total amount of FR chemical present in the barrier and the potential migration of the FR chemical(s) in the barrier to a surrogate material for skin, to estimate dermal absorption. Tests were also done to determine the amount of FR chemical that may be ingested. Finally, the airborne particle-bound release of the FR chemical(s) from the barrier during tests simulating normal use over 10 years was used to estimate potential inhalation exposures. The staff also conducted limited aging studies to assess the effects of environmental factors, such as heat and humidity, on the release of airborne particle-bound FR chemicals.

The staff quantitatively assessed all applicable routes of exposure (i.e., dermal, oral, and inhalation) for the FR chemicals for which migration/exposure data were available and determined the potential risk associated with exposure to these FR chemicals. The analysis included estimates of average exposure, as well as the reasonable upper bound exposures. Staff evaluated potential exposure through all three routes combined, as well as individually. The staff's studies and analyses applied conservative assumptions in areas of scientific uncertainty, that is, assumptions that tend to overestimate exposure and risk.

Based on this risk assessment, the staff concludes that AT, boric acid, and DBDPO would not present any appreciable risk of health effects to consumers who sleep on treated mattresses. The estimated hazard index values for these compounds are all substantially less than one under all exposure conditions. As for vinylidene chloride, no detectable concentrations were found, even in the staff's initial extreme extraction studies. Thus, it is considered unlikely that significant quantities of this compound will be released from mattress barriers. Since melamine and ammonium polyphosphate do not satisfy the FHSA definition of ''toxic,'' these compounds are not expected to present any appreciable risk of health effects to consumers, and therefore, were not tested extensively.

The results of this exposure and risk assessment of the selected FR treatments suggest that there are a number of commercially available FR-treated barriers that can be used to meet the standard that are not expected to present any appreciable risk of health effects to consumers who sleep on mattresses that comply with the standard.

M. Environmental Considerations

Usually, CPSC rules establishing performance requirements are considered to ''have little or no potential for affecting the human environment,'' and environmental

assessments are not usually prepared for these rules (see 16 CFR 1021.5(c)(1)). However, because manufacturers may need to use more inherently flame resistant materials or incorporate flame retardant (FR) chemicals into their products in order to meet the standard, the Commission provided a more thorough discussion of the potential for environmental impacts in the NPR than it normally would.

As mentioned above, at the time of the NPR, the staff prepared a preliminary qualitative assessment of the potential risk of health effects from exposure to flame retardant chemicals that may be incorporated in mattresses to meet the proposed standard. Based on this assessment, the staff prepared (and posted on CPSC's Web site) both an Environmental Assessment (''EA'') and a Finding of No Significant Impact (''FONSI''),[7] which were discussed in the NPR. The EA concluded that there are FR chemicals and flame resistant materials available for meeting the proposed standard that, based on currently available data, are not expected to pose unacceptable risks to the environment or human health and are widely used in other applications. [14] The FONSI concluded that there will be no significant impacts on the human environment as a result of the proposed standard. [15] The CPSC reaffirms these conclusions with regard to the final rule. [10] As discussed in section L. above, after publication of the NPR, the staff performed additional work and prepared a quantitative assessment of potential health effects of FR chemicals that could be used to meet the mattress standard. This subsequent work further supports the conclusions in the EA and FONSI.

N. Executive Order 12988 (Preemption)

Under Executive Order 12988 (Feb. 5, 1996) federal agencies must specify the preemptive effect, if any, of new regulations. Requirements imposed under state law, including laws developed in state courts, may be limited, foreclosed or barred by express language in a Congressional enactment, by implication from the breadth of a Congressional regulatory scheme that occupies the legislative field, or by implication because of a conflict with a Congressional enactment.

The Commission intends and expects that the new mattress flammability standard will preempt inconsistent state standards and requirements, whether in the form of positive enactments or court created requirements. State requirements intended to reduce the risk of mattress fire, no matter how well intentioned, have the potential to undercut the Commission's uniform national flammability standard, create impediments for manufacturers whose mattress products enter the stream of interstate commerce, establish requirements that make dual state and federal compliance physically impossible, and cause confusion among consumers seeking to understand differing state and federal mattress fire requirements.

To fully accomplish the Congressional purpose of the FFA in this area, this mattress flammability rule must take precedence over any non-identical state requirements that seek to reduce the risk of mattress fire. Preemption of non-identical state requirements is expressly and impliedly supported by the words of the statute, its legislative history, and public policy. The FFA expressly provides that if the Commission issues a flammability standard for a fabric or product under the FFA, ''no State or political subdivision of a State may establish or continue in effect a flammability standard or other regulation for such fabric, related material or product if the standard or other regulation is designed to protect against the same risk of the occurrence of fire with respect to which the standard or other regulation under this Act is in effect unless the State or political subdivision standard or other regulation is identical to the Federal standard or other regulation.'' 15 U.S.C. 1203(a). The statute also provides an application process for an exemption from federal preemption for non-identical State or political subdivision flammability requirements. Thus, in the absence of such an exemption, the federal standard will preempt all non-identical state requirements.

The legislative history of the FFA affirms the broad preemptive scope of the federal rule. The Conference Committee Report explicitly explained the preemptive reach of the FFA:

> The conferees wish to emphasize that in determining whether a Federal requirement preempts State or local requirements, the key factor is whether the State or local requirement respecting a product is designed to deal with the same risk of injury or illness associated with the product as the Federal requirement. Even though the State or local requirement is characterized in different terms than the Federal requirement or may have different testing methods for determining compliance, so long as the Federal and State or local requirements deal with the same risk of injury associated with a product, the Federal requirement preempts a different State or local requirement.
>
> [A] State standard designed to protect against the risk of injury from a fabric catching on fire would be preempted by a Federal flammability standard covering the same fabric even though the Federal flammability standard called for tests using matches and the State standard called for tests using cigarettes. When an item is covered by a Federal flammability standard * * * a different State or local flammability requirement applicable to the same item will be preempted since both are designed to protect against the same risk, that is the occurrence of death or injury from fire.

H.R. Rep. No. 1022, 94th Cong., 2d Sess. 29 (1976).

The broad preemptive reach of the new rule is further supported by Congress' omission from the FFA of a savings clause. A savings clause is commonly used to restrict the preemptive reach of a federal law. In the context of the Commission, the Congress included savings clauses to preserve state common law requirements in the Consumer Product Safety Act, 15 U.S.C. 2074(a) and 2072(c). Moreover, the existence or absence of a savings clause in a statutory scheme is a significant factor in court decisions reviewing the scope of preemption. The absence of a savings clause generally indicates Congressional intent for broader preemption of state flammability requirements that seek to reduce the risk of mattress fires.

In developing this mattress flammability standard, the Commission carefully balanced numerous factors to craft a rule that will improve consumer safety and meet the Commission's other statutory obligations. The Commission believes that a different standard or additional requirements imposed by state statutes or common law would upset this balance. The FFA requires the Commission to find that the benefits of the regulation bear a reasonable relationship to its costs and that the regulation imposes the ''least burdensome'' requirement to prevent or adequately reduce the risk of injury. See 15 U.S.C. 1193(j)(1)–(2). The Commission has performed such analysis and believes that requiring mattresses to meet a different flammability requirement—even one that is effectively more stringent—would impose greater costs, in both monetary and non-monetary terms, on manufacturers and consumers and thereby upset the carefully tailored balance of costs and benefits this standard achieves.

This standard prescribes a performance test. Requiring mattress manufacturers to use specific materials or methodologies to reach the flammability standard's goals could

[7] Both of these documents are available from the Commission's Office of the Secretary or from the Commission's Web site (see footnote 2 above).

impose greater costs and interfere with the particular balance the Commission struck between competing public policy considerations. Mattress manufacturers need to maintain the flexibility and business discretion to decide what combination of design and materials is appropriate to meet the federal flammability standard.

Finally, non-identical requirements imposed by state courts conflict with the federal standard no less than requirements imposed by state legislatures or state agencies. Congress' repeated characterization in the Conference Report of the FFA's ''requirements'' could not have intended to exclude state common law causes of action. If it did, then each state could use its tort law to enforce whatever flammability standard it deemed appropriate, potentially creating fifty different mattress fire standards across the nation. This is precisely the result Congress sought to avoid. Congress' explicit ban on non-identical state flammability requirements would be meaningless if states were free to incorporate such standards into their common law duties of care.

For all these reasons, this standard would preempt all non-identical state requirements which seek to reduce the risk of death or injury from mattress fires.

O. Effective Date

The FFA requires that the effective date of a flammability standard be one year after the final standard is promulgated unless the Commission finds for good cause shown that an earlier or later date is in the public interest. 15 U.S.C. 1193(b). The Commission proposed that the rule would become effective one year from publication of a final rule in the **Federal Register** and would apply to mattresses entering the chain of distribution on or after that date. However, as discussed above, in response to comments, the Commission is providing an effective date of July 1, 2007 to coincide with the mattress production cycle.

The Commission finds that this longer effective date is in the public interest. An effective date that coincides with the regular model/style change cycle will minimize the standard's impact on the industry, particularly small producers outside of California.

P. Findings

Sections 1193(a) and (j)(2) of the FFA require the Commission to make certain findings when it issues a flammability standard. The Commission must find that the standard: (1) Is needed to adequately protect the public against the risk of the occurrence of fire leading to death, injury or significant property damage; (2) is reasonable, technologically practicable, and appropriate; (3) is limited to fabrics, related materials or products which present unreasonable risks; and (4) is stated in objective terms. Id. 1193(b). In addition, the Commission must find that: (1) If an applicable voluntary standard has been adopted and implemented, that compliance with the voluntary standard is not likely to adequately reduce the risk of injury, or compliance with the voluntary standard is not likely to be substantial; (2) that benefits expected from the regulation bear a reasonable relationship to its costs; and (3) that the regulation imposes the least burdensome requirement that would prevent or adequately reduce the risk of injury. The last three findings must be included in the regulation. Id. 1193(j)(2). These findings are discussed below.

The standard is needed to adequately protect the public against unreasonable risk of the occurrence of fire. National fire loss estimates indicate that mattresses and bedding were the first items to ignite in 15,300 residential fires attended by the fire service annually during 1999–2002. These fires resulted in 350 deaths, 1,750 injuries and $295.0 million in property loss each year. Of these, the staff considers an estimated 14,300 fires, 330 deaths, 1,680 injuries, and $281.5 million property loss annually to be addressable by the standard. The Commission estimates that the standard will prevent 69 to 78 percent of deaths and 73 to 84 percent of the injuries occurring with these addressable mattress/bedding fires. Thus, the Commission estimates that when all mattresses have been replaced by ones that comply with the standard, 240 to 270 deaths and 1,150 to 1,330 injuries will be avoided annually as a result of the standard.

The regulatory analysis explains that the Commission estimates lifetime net benefits of $23 to $50 per mattress or aggregate lifetime net benefits for all mattresses produced in the first year of the standard of $514 to $1,132 million from the standard. Thus, the Commission finds that the standard is needed to adequately protect the public from the unreasonable risk of the occurrence of fire.

The standard is reasonable, technologically practicable, and appropriate. Through extensive research and testing, NIST developed a test method to assess the flammability of mattresses ignited by an open flame. The test method represents the typical scenario of burning bedclothes igniting a mattress. Based on NIST's testing, the standard establishes criteria that will reduce the fire intensity of a burning mattress, allowing more time for occupants to escape before flashover occurs. NIST testing has also demonstrated that mattresses can be constructed with available materials and construction that will meet the test criteria. Therefore, the Commission finds that the standard is reasonable, technologically practicable, and appropriate.

The standard is limited to fabrics, related materials, and products that present an unreasonable risk. The standard applies to mattresses and mattress and foundation sets. It is a performance standard. Thus, it neither requires nor restricts the use of particular fabrics, related materials or products. Manufacturers may choose the materials and methods of construction that they believe will best suit their business and result in mattresses that can meet the specified test criteria. As discussed above, the Commission concludes that current mattresses present an unreasonable risk. Therefore, the Commission finds that the standard is limited to fabrics, related materials, and products that present an unreasonable risk.

Voluntary standards. The Commission is not aware of any voluntary standard in existence that adequately and appropriately addresses the specific risk of injury addressed by this standard. Thus, no findings concerning compliance with, and adequacy of, voluntary standards are necessary.

Relationship of Benefits to Costs. The Commission estimates that the total lifetime benefits of a mattress complying with this standard will range from $45 to $57 per mattress (based on a 10 year mattress life and 3% discount rate). The Commission estimates that total resource costs of the standard will range from $8 to $22 per mattress. This yields net benefits of $23 to $50 per mattress. The Commission estimates that aggregate lifetime benefits associated with all mattresses produced the first year the standard becomes effective range from $1,024 to $1,307 million, and that aggregate resource costs associated with these mattresses range from $175 to $511 million, yielding net benefits of about $514 to $1,132 million. Therefore, the Commission finds that the benefits from the regulation bear a reasonable relationship to its costs.

Least burdensome requirement that adequately reduces the risk of injury. The Commission considered the following alternatives: alternative maximum peak heat release rate and test

duration, alternative total heat released in the first 10 minutes of the test, mandatory production testing, a longer effective date, taking no action, relying on a voluntary standard, and requiring labeling alone. As discussed in the preamble above and the regulatory analysis, these alternatives are expected to increase costs without increasing benefits, or significantly reduce the benefits expected from the rule. Therefore, the Commission finds that the standard imposes the least burdensome requirement that would adequately reduce the risk.

Q. Conclusion

For the reasons stated in this preamble, the Commission finds that this flammability standard for mattress sets is needed to adequately protect the public against the unreasonable risk of the occurrence of fire leading to death, injury, and significant property damage. The Commission also finds that the standard issued today is reasonable, technologically practicable, and appropriate. The Commission further finds that the standard is limited to the fabrics, related materials and products which present such unreasonable risks. The Commission also finds that the benefits from the regulation bear a reasonable relationship to its costs and the standard imposes the least burdensome requirement that would adequately reduce the risk.

List of Subjects in 16 CFR Part 1633

Consumer protection, Flammable materials, Labeling, Mattresses and mattress pads, Records, Textiles, Warranties.

■ For the reasons stated in the preamble, the Commission amends Title 16 of the Code of Federal Regulations by adding a new part 1633 to read as follows:

PART 1633—STANDARD FOR THE FLAMMABILITY (OPEN FLAME) OF MATTRESS SETS

Subpart A—The Standard

Sec.
1633.1 Purpose, scope and applicability.
1633.2 Definitions.
1633.3 General requirements.
1633.4 Prototype testing requirements.
1633.5 Prototype pooling and confirmation testing requirements.
1633.6 Quality assurance requirements.
1633.7 Mattress test procedure.
1633.8 Findings.
1633.9 Glossary of terms.

Subpart B—Rules and Regulations

1633.10 Definitions.
1633.11 Records.
1633.12 Labeling.
1633.13 Tests for guaranty purposes, compliance with this section, and ''one of a kind'' exemption.
FIGURE 1 TO PART 1633—TEST ASSEMBLY, SHOWN IN FURNITURE CALORIMETER (CONFIGURATION A)
FIGURE 2 TO PART 1633—TEST ARRANGEMENT IN 3.05m × 3.66m (10 ft × 12 ft) ROOM (CONFIGURATION B)
FIGURE 3 TO PART 1633—DETAILS OF HORIZONTAL BURNER HEAD
FIGURE 4 TO PART 1633—DETAILS OF VERTICAL BURNER HEAD
FIGURE 5 TO PART 1633—DETAILS OF BURNER STAND-OFF
FIGURE 6 TO PART 1633—BURNER ASSEMBLY SHOWING ARMS AND PIVOTS (SHOULDER SCREWS), IN RELATION TO, PORTABLE FRAME ALLOWING BURNER HEIGHT ADJUSTMENT
FIGURE 7 TO PART 1633—ELEMENTS OF PROPANE FLOW CONTROL FOR EACH BURNER
FIGURE 8 TO PART 1633—JIG FOR SETTING MATTRESSES AND FOUNDATION SIDES IN SAME PLANE
FIGURE 9 TO PART 1633—BURNER PLACEMENTS ON MATTRESS/FOUNDATION
FIGURE 10 TO PART 1633—JIG FOR SETTING BURNERS AT PROPER DISTANCES FROM MATTRESS/FOUNDATION
FIGURE 11 TO PART 1633—DIAGRAMS FOR GLOSSARY OF TERMS
FIGURE 12 TO PART 1633—B LABELS FOR DOMESTIC MATTRESS WITH FOUNDATION
FIGURE 13 TO PART 1633—B LABELS FOR IMPORTED MATTRESS WITH FOUNDATION
FIGURE 14 TO PART 1633—B LABEL FOR DOMESTIC MATTRESS ALONE AND WITH FOUNDATION
FIGURE 15 TO PART 1633—B LABEL FOR IMPORTED MATTRESS ALONE AND WITH FOUNDATION
FIGURE 16 TO PART 1633—B LABEL FOR DOMESTIC MATTRESS ONLY
FIGURE 17 TO PART 1633 B—LABEL FOR IMPORTED MATTRESS ONLY

Authority: 15 U.S.C. 1193, 1194

Subpart A—The Standard

§ 1633.1 Purpose, scope, and applicability.

(a) *Purpose.* This part 1633 establishes flammability requirements that all mattress sets must meet before sale or introduction into commerce. The purpose of the standard is to reduce deaths and injuries associated with mattress fires by limiting the size of the fire generated by a mattress set during a thirty minute test.

(b) *Scope.* (1) All mattress sets, as defined in § 1633.2(c), manufactured, imported, or renovated on or after the effective date of this standard are subject to the requirements of the standard.

(2) One-of-a-kind mattress sets may be exempted from testing under this standard in accordance with § 1633.13(c).

(c) *Applicability.* The requirements of this part 1633 shall apply to each ''manufacturer'' (as that term is defined in § 1633.2(k)) of mattress sets which are manufactured for sale in commerce.

§ 1633.2 Definitions.

In addition to the definitions given in section 2 of the Flammable Fabrics Act as amended (15 U.S.C. 1191), the following definitions apply for purposes of this part 1633.

(a) *Mattress* means a resilient material or combination of materials enclosed by a ticking (used alone or in combination with other products) intended or promoted for sleeping upon. This includes mattresses that have undergone renovation as defined in paragraph (d) of this section.

(1) This term includes, but is not limited to, adult mattresses, youth mattresses, crib mattresses (including portable crib mattresses), bunk bed mattresses, futons, flip chairs without a permanent back or arms, sleeper chairs, and water beds or air mattresses if they contain upholstery material between the ticking and the mattress core. Mattresses used in or as part of upholstered furniture are also included; examples are convertible sofa bed mattresses, corner group mattresses, day bed mattresses, roll-away bed mattresses, high risers, and trundle bed mattresses. See § 1633.9 Glossary of terms, for definitions of these items.

(2) This term excludes mattress pads, mattress toppers (items with resilient filling, with or without ticking, intended to be used with or on top of a mattress), sleeping bags, pillows, liquid and gaseous filled tickings, such as water beds and air mattresses that contain no upholstery material between the ticking and the mattress core, upholstered furniture which does not contain a mattress, and juvenile product pads such as car bed pads, carriage pads, basket pads, infant carrier and lounge pads, dressing table pads, stroller pads, crib bumpers, and playpen pads. See § 1633.9 Glossary of terms, for definitions of these items.

(b) *Foundation* means a ticking covered structure used to support a mattress or sleep surface. The structure may include constructed frames, foam, box springs, or other materials, used alone or in combination.

(c) *Mattress set* means either a mattress and foundation labeled by the manufacturer for sale as a set, or a mattress labeled by the manufacturer for sale without any foundation.

(d) *Renovation* means altering an existing mattress set for the purpose of resale.

(1) This term includes any one, or any combination of the following: replacing the ticking or batting, stripping a mattress to its springs, rebuilding a mattress, or replacing components with new or recycled materials.

(2) This term excludes alterations if the person who renovates the mattress intends to retain the renovated mattress for his or her own use, or if a customer or a renovator merely hires the services of the renovator and intends to take back the renovated mattress for his or her own use.

(e) *Ticking* means the outermost layer of fabric or related material of a mattress or foundation. It does not include any other layers of fabric or related materials quilted together with, or otherwise attached to, the outermost layer of fabric or related material.

(f) *Upholstery material* means all material, either loose or attached, between the mattress ticking and the core of a mattress.

(g) *Edge* means the seamed, unseamed or taped border edge of a mattress or foundation that joins the top and/or bottom with the side panels.

(h) *Tape edge* means an edge made by using binding tape to encase and finish raw edges.

(i) *Binding tape* means a fabric strip used in the construction of some edges.

(j) *Seam thread* means the thread used to form stitches in construction features, seams, and tape edges.

(k) *Manufacturer* means an individual plant or factory at which mattress sets are manufactured or assembled. For purposes of this part 1633, importers and renovators are considered manufacturers.

(l) *Prototype* means a specific design of mattress set that serves as a model for production units intended to be introduced into commerce and is the same as the production units with respect to materials, components, design and methods of assembly. A mattress intended for sale with a foundation(s) shall be considered a separate and distinct prototype from a mattress intended for sale without a foundation.

(m) *Prototype developer* means a third party that develops a prototype for use by a manufacturer. Such prototypes may be qualified by either the prototype developer or by the manufacturer.

(n) *Qualified prototype* means a prototype that has been tested in accordance with § 1633.4(a) and meets the criteria stated in § 1633.3(b).

(o) *Confirmed prototype* means a prototype that is part of a pooling arrangement and is the same as a qualified prototype with respect to materials, components, design and methods of assembly and has been tested in accordance with § 1633.5(a)(3) and meets the criteria stated in § 1633.3(b).

(p) *Subordinate prototype* means a mattress set that is based on a qualified or confirmed prototype and is the same as the qualified or confirmed prototype, except as permitted by § 1633.4(b). A subordinate prototype is considered to be represented by a qualified or confirmed prototype and need not be tested in accordance with § 1633.4(a) or § 1633.5(a)(3).

(q) *Prototype pooling* means a cooperative arrangement—whereby one or more manufacturers build mattress sets based on a qualified prototype produced by another manufacturer or prototype developer. A manufacturer who relies on another manufacturer's or prototype developer's qualified prototype must perform a confirmation test on the mattress set it manufactures.

(r) *Confirmation test* means a pre-market test conducted by a manufacturer who is relying on a qualified prototype produced by another manufacturer or prototype developer. A confirmation test must be conducted in accordance with the procedures set forth in § 1633.7 and meet the criteria in § 1633.3(b).

(s) *Production lot* means any quantity of finished mattress sets that are produced in production intervals defined by the manufacturer, and are intended to replicate a specific qualified, confirmed or subordinate prototype that complies with this part 1633.

(t) *Specimen* means a mattress set tested under this regulation.

(u) *Twin size* means any mattress with the dimensions 38 inches (in) (965 millimeters) × 74.5 in. (1892 mm); all dimensions may vary by ±½ in. (±13 mm).

(v) *Core* means the main support system that may be present in a mattress, such as springs, foam, water bladder, air bladder, or resilient filling.

§ 1633.3 General requirements.

(a) *Summary of test method.* The test method set forth in § 1633.7 measures the flammability (fire test response characteristics) of a mattress specimen by exposing the specimen to a specified flaming ignition source and allowing it to burn freely under well-ventilated, controlled environmental conditions. The flaming ignition source shall be a pair of propane burners. These burners impose differing fluxes for differing times on the top and sides of the specimen. During and after this exposure, measurements shall be made of the time-dependent heat release rate from the specimen, quantifying the energy generated by the fire. The rate of heat release must be measured by means of oxygen consumption calorimetry.

(b) *Test criteria.* (1) When testing the mattress set in accordance with the test procedure set forth in § 1633.7, the specimen shall comply with both of the following criteria:

(i) The peak rate of heat release shall not exceed 200 kilowatts (''kW'') at any time within the 30 minute test; and

(ii) The total heat release shall not exceed 15 megajoules (''MJ'') for the first 10 minutes of the test.

(2) In the interest of safety, the test operator should discontinue the test and record a failure if a fire develops to such a size as to require suppression for the safety of the facility.

(c) *Testing of mattress sets.* Mattresses labeled for sale with a foundation shall be tested with such foundation. Mattresses labeled for sale without a foundation shall be tested alone.

(d) *Compliance with this standard.* Each mattress set manufactured, imported, or renovated on or after the effective date of the standard shall meet the test criteria specified in paragraph (b) of this section and otherwise comply with all applicable requirements of this part 1633.

§ 1633.4 Prototype testing requirements.

(a) Except as otherwise provided in paragraph (b) of this section, each manufacturer shall cause three specimens of each prototype to be tested according to § 1633.7 and obtain passing test results according to § 1633.3(b) before selling or introducing into commerce any mattress set based on that prototype, unless the manufacturer complies with the prototype pooling and confirmation testing requirements in § 1633.5.

(b) Notwithstanding the requirements of paragraph (a) of this section, a manufacturer may sell or introduce into commerce a mattress set that has not been tested according to § 1633.7 if that mattress set differs from a qualified or confirmed prototype only with respect to:

(1) Mattress/foundation length and width, not depth (*e.g.*, twin, queen, king);

(2) Ticking, unless the ticking of the qualified prototype has characteristics (such as chemical treatment or special fiber composition) designed to improve performance on the test prescribed in this part; and/or

(3) Any component, material, design or method of assembly, so long as the manufacturer can demonstrate on an

objectively reasonable basis that such differences will not cause the mattress set to exceed the test criteria specified in § 1633.3(b).

(c) All tests must be conducted on specimens that are no smaller than a twin size, unless the largest size mattress set produced is smaller than a twin size, in which case the largest size must be tested.

(d) (1) If each of the three specimens meets both the criteria specified in § 1633.3(b), the prototype shall be qualified. If any one (1) specimen fails to meet the test criteria of § 1633.3(b), the prototype is not qualified.

(2) Any manufacturer may produce a mattress set for sale in reliance on prototype tests performed before the effective date of this Standard, provided:

(i) The manufacturer has documentation showing that such tests were conducted in accordance with all requirements of this section and § 1633.7 and yielded passing results according to the test criteria of § 1633.3(b);

(ii) Any tests conducted more than 30 days after publication of this standard in the **Federal Register** must comply with the recordkeeping requirements in § 1633.11;

(iii) Such mattress sets may be used for prototype pooling only if the manufacturer complies with applicable recordkeeping requirements in § 1633.11; and

(iv) Such mattress sets may serve as the basis for a subordinate prototype only if the manufacturer has all records required by § 1633.11.

§ 1633.5 Prototype pooling and confirmation testing requirements.

(a) *Prototype pooling.* One or more manufacturers may rely on a qualified prototype produced by another manufacturer or prototype developer provided that:

(1) The prototype meets the requirements of § 1633.4;

(2) The mattress sets being produced are the same as the qualified prototype with respect to materials, components, design and methods of assembly; and

(3) The manufacturer producing mattress sets in reliance on a qualified prototype has performed a confirmation test on at least one (1) Specimen of the mattress set it produces in accordance with § 1633.7. The tested specimen must meet the criteria under § 1633.3(b) before any mattress sets based on the qualified prototype may be sold or introduced into commerce.

(b) *Confirmation test failure.* (1) If the confirmation test specimen fails to meet the criteria of § 1633.3(b), the manufacturer thereof shall not sell any mattress set based on the same qualified prototype until that manufacturer takes corrective measures, tests a new specimen, and the new specimen meets the criteria of § 1633.3(b).

(2) If a confirmation test specimen fails to meet the criteria of § 1633.3(b), the manufacturer thereof must notify the manufacturer of the prototype of the test failure.

§ 1633.6 Quality assurance requirements.

(a) *Quality assurance.* Each manufacturer shall implement a quality assurance program to ensure that mattress sets manufactured for sale are the same as the qualified and/or confirmed prototype on which they are based with respect to materials, components, design and methods of assembly, except as permitted by § 1633.4(b). At a minimum these procedures shall include:

(1) Controls, including incoming inspection procedures, of all mattress set materials, components and methods of assembly to ensure that they are the same as those used in the prototype on which they are based;

(2) Designation of a production lot that is represented by the prototype; and

(3) Inspection of mattress sets produced for sale sufficient to demonstrate that they are the same as the prototype on which they are based with respect to materials, components, design and methods of assembly.

(b) *Production testing.* Manufacturers are encouraged to conduct, as part of the quality assurance program, random testing of mattress sets being produced for sale according to the requirements of §§ 1633.3 and 1633.7.

(c) *Failure of mattress sets produced for sale to meet flammability standard.* (1) *Sale of mattress sets.* If any test performed for quality assurance yields results which indicate that any mattress set of a production lot does not meet the criteria of § 1633.3(b), or if a manufacturer obtains test results or other evidence that a component or material or construction/assembly process used could negatively affect the test performance of the mattress set as set forth in § 1633.3(b), the manufacturer shall cease production and distribution in commerce of such mattress sets until corrective action is taken.

(2) *Corrective action.* A manufacturer must take corrective action when any mattress set manufactured or imported for sale fails to meet the flammability test criteria set forth in § 1633.3(b).

§ 1633.7 Mattress test procedure.

(a) *Apparatus and test materials.* (1) *Calorimetry.* The rate of heat release must be measured by means of oxygen consumption calorimetry. The calibration should follow generally accepted practices for calibration. The calorimetry system shall be calibrated at a minimum of two (2) calibration points—at 75 kW and 200 kW.

(2) *Test area.* The test area must have either Test Configuration A or B. The test area conditions shall be maintained at a temperature greater than 15 °C (59 °F) and less than 27 °C (80.6 °F) and a relative humidity less than 75 percent.

(i) *Test configuration A. (an open calorimeter (or furniture calorimeter)).* In this configuration, the specimen to be tested is placed under the center of an open furniture calorimeter. Figure 1 of this part shows the test assembly atop a bed frame and catch surface. The specimen shall be placed under an open hood which captures the entire smoke plume and is instrumented for heat release rate measurements. The area surrounding the test specimen in an open calorimeter layout shall be sufficiently large that there are no heat re-radiation effects from any nearby materials or objects. The air flow to the test specimen should be symmetrical from all sides. The air flow to the calorimeter hood shall be sufficient to ensure that the entire fire plume is captured, even at peak burning. Skirts may be placed on the hood periphery to help assure this plume capture, if necessary, though they must not be of such an excessive length as to cause the incoming flow to disturb the burning process. Skirts must also not heat up to the point that they contribute significant re-radiation to the test specimen. The air supply to the hood shall be sufficient that the fire is not in any way limited or affected by the available air supply. The fire plume should not enter the hood exhaust duct. Brief (seconds) flickers of flame that occupy only a minor fraction of the hood exhaust duct inlet cross-section are acceptable since they do not signify appreciable suppression of flames.

(ii) *Test configuration B.* The test room shall have dimensions 10 ft. by 12 ft. by 8 ft. (3048 mm x 3658 mm x 2438 mm) high. The specimen is placed within the burn room. All smoke exiting from the room is caught by a hood system instrumented for heat release rate measurements. The room shall have no openings permitting air infiltration other than a doorway opening 38 in ± 0.25 in by 80 in ± 0.25 in (965 mm ± 6.4 mm x 2032 mm ± 6.4 mm) located as indicated in Figure 2 of this part and other small openings as necessary to

make measurements. The test room shall be constructed of wood or metal studs and shall be lined with fire-rated wallboard or calcium silicate board. An exhaust hood shall be positioned outside of the doorway so as to collect all of the combustion gases. There shall be no obstructions in the air supply to the set-up.

(3) *Location of test specimen.* The location of the test specimen is shown in Figure 2 of this part. The angled placement is intended to minimize the interaction of flames on the side surfaces of the test specimen with the room walls. One corner of the test specimen shall be 13 centimeters (cm) to 17 cm from the wall and the other corner shall be 25 cm to 30 cm from the wall. The test room shall contain no other furnishings or combustible materials except for the test specimen.

(4) *Bed frame.* (i) *Frame dimensions.* The specimen shall be supported around its perimeter by the bed frame. For twin size mattresses, the specimen shall be placed on top of a welded bed frame 1.90 m by 0.99 m (75 in by 39 in) made from 40 mm (1.50 in) steel angle. If testing a size other than twin, the bed frame shall similarly match the dimensions of the specimen.

(ii) *Frame height.* The frame shall be 115 mm (4.5 in) high, except if adjustments are necessary to accommodate the required burner position in paragraph (h)(2)(ii) of this section. The height of the frame shall also be adjusted, as necessary, so that the burner is no less than 25mm (1 in) above the supporting surface.

(iii) *Frame crosspieces.* The frame shall be completely open under the foundation except for two crosspieces, 25 mm wide (1 in) at the ⅓ length points, except when sagging of the specimen between the crosspieces exceeds 19 mm (¾ in) below the frame. Minimal additional crosspieces shall then be added to prevent sagging of the specimen.

(5) *Catch pan.* The bed frame feet shall rest on a surface of either calcium silicate board or fiber cement board, 13 mm (0.5 in) thick, 2.11 m by 1.19 m (83 in by 47 in). The board serves as a catch surface for any flaming melt/drip material falling from the bed assembly and may be the location of a pool fire that consumes such materials. This surface must be cleaned between tests to avoid build-up of combustible residues. Lining this surface with aluminum foil to facilitate cleaning is not recommended since this might increase fire intensity via reflected radiation.

(6) *Ignition source.* (i) *General.* The ignition source shall consist of two T-shaped burners as shown in Figures 3 and 4 of this part. One burner impinges flames on the top surface of the mattress. The second burner impinges flames on the side of the mattress and on the side of the foundation. Each of the burners shall be constructed from stainless steel tubing (12.7 mm diameter with 0.89 ± 0.5 mm wall thickness; 0.50 in diameter with 0.035 ± 0.002 in wall). Each burner shall incorporate a stand-off foot to set its distance from the test specimen surface (Figure 5 of this part). Both burners shall be mounted with a mechanical pivot point but the side burner is locked in place to prevent movement about this pivot in normal usage. The top burner, however, is free to rotate about its pivot during a burner exposure and is lightly weighted so as to exert a downward force on the mattress top through its stand-off foot so that the burner follows a receding top surface on the test specimen (Figure 6 of this part). The combination of burner stand-off distance and propane gas flow rate to the burners determines the heat flux they impose on the surface of the test specimen so that both of these parameters are tightly controlled.

(ii) *Top surface burner.* The T head of the top surface burner (horizontal burner, Figure 3 of this part) shall be 305 ± 2 mm (12 ± 0.08 in) long with gas tight plugs in each end. Each side of the T shall contain 17 holes equally spaced over a 135 mm length (8.5 mm ± 0.1 mm apart; 0.333 ± 0.005 in). The holes on each side shall begin 8.5 mm (0.33 in) from the centerline of the burner head. The holes shall be 1.45 mm to 1.53 mm (0.058 in to 0.061 in) in diameter (which corresponds to Grade 10 machining practice with a well formed #53 drill bit). The holes shall point 5° out of the plane of the diagram in Figure 3. This broadens the width of the heat flux profile imposed on the surface of the test specimen.

(iii) *Side surface burner.* The T head of the side surface burner (vertical burner) shall be constructed similarly to the top surface burner, as shown in Figure 4 of this part, except that its overall length shall be 254 ± 2 mm (10 ± 0.08 in). Each side of the burner head shall contain 14 holes spaced evenly over a 110 mm length (8.5 mm ± 0.1 mm apart; 0.333 ± 0.005 in). The holes shall be 1.45 mm to 1.53 mm (0.058 in to 0.061 in) in diameter (which corresponds to Grade 10 machining practice with a well formed #53 drill bit). The holes shall point 5° out of the plane of the diagram in Figure 4.

(iv) *Burner stand-off.* The burner stand-off on each burner shall consist of a collar fixed by a set screw onto the inlet tube of the burner head (Figure 5 of this part). The collar shall hold a 3 mm diameter stainless steel rod having a 12.7 mm by 51 mm by (2–2.5 mm) thick (0.5 in by 2 in by (0.08–0.10 in) thick) stainless steel pad welded on its end with its face (and long axis) parallel to the T head of the burner. The foot pad shall be displaced about 10 mm to 12 mm from the longitudinal centerline of the burner head so that it does not rest on the test specimen in an area of peak heat flux. A short section (9.5 mm outer diameter (''OD''), about 80 mm long; ⅜ in OD, about 3.2 in long) of copper tubing shall be placed in the inlet gas line just before the burner to facilitate making the burner nominally parallel to the test specimen surface (by a procedure described below). The copper tube on the top surface burner should be protected from excessive heat and surface oxidation by wrapping it with a suitable layer of high temperature insulation to protect the equipment. Both copper tubes are to be bent by hand in the burner alignment process. They must be replaced if they become work-hardened or crimped in any way. The gas inlet lines (12.7 mm OD stainless steel tubing; 0.50 in) serve as arms leading back to the pivot points and beyond, as shown in Figure 6 of this part. The length to the pivot for the top burner shall be approximately 1000 mm (40 in).

(v) *Frame.* Figure 6 of this part shows the frame that holds the burners and their pivots, which are adjustable vertically in height. All adjustments (burner height, burner arm length from the pivot point, counterweight positions along the burner arm) are facilitated by the use of knobs or thumbscrews as the set screws. The three point footprint of the burner frame, with the two forward points on wheels, facilitates burner movement and burner stability when stationary.

(vi) *Arms.* The metal arms attached to the burners shall be attached to a separate gas control console by flexible, reinforced plastic tubing.[1] The gas control console is mounted separately so as to facilitate its safe placement outside of the test room throughout the test procedure. The propane gas lines running between the console and the burner assembly must be anchored on the assembly before running to the burner inlet arms. A 1.5 m ± 25 mm (58 in ± 1 in) length of flexible, reinforced tubing between the anchor point and the end of each burner inlet allows free movement of the top burner about its pivot point. The top burner arm shall have a pair of moveable cylindrical

[1] Fiber-reinforced plastic tubing (6 mm ID by 9.5 mm OD; 3 inch ID by inch OD) made of PVC should be used.

counterweights that are used, as described below, to adjust the downward force on the stand-off foot.

(vii) *Burner head.* Each burner head shall have a separate pilot light consisting of a 3 mm OD (⅛ in OD) copper tube with an independently-controlled supply of propane gas. The tube terminates within 10 mm of the center of the burner head. Care must be taken to set the pilot flame size small enough so as not to heat the test specimen before the timed burner exposure is begun.

(viii) *Flow control system.* Each burner shall have a flow control system of the type shown in Figure 7 of this part. Propane gas from a source such as a bottle is reduced in pressure to approximately 70 kilopascals (''kPa'') (20 pounds per square inch gage (''psig'')) and fed to the system shown in Figure 8 of this part. The gas flow to the burner is delivered in a square-wave manner (constant flow with rapid onset and termination) by means of the solenoid valve upstream of the flowmeter. An interval timer (accurate to ± 0.2 s) determines the burner flame duration. The pilot light assures that the burner will ignite when the solenoid valve opens.[2] The gas flow shall be set using a rotameter type of flowmeter, with a 150 mm scale, calibrated for propane. When calibrating the flowmeter, take into account that the flow resistance of the burner holes causes a finite pressure increase in the flowmeter above ambient. (If a calibration at one atmosphere is provided by the manufacturer, the flowmeter reading, at the internal pressure existing in the meter, required to get the flow rates listed below must be corrected, typically by the square root of the absolute pressure ratio. This calls for measuring the actual pressure in the flow meters when set near the correct flow values. A value roughly in the range of 1 kPa to 3 kPa—5 in to 15 in of water—can be expected.) See information on calibration in paragraph (b) of this section.

(ix) *Gas flow rate.* Use propane gas: The propane shall be minimum 99% pure (often described by suppliers as CP or ''chemically pure'' grade, but this designation should not be relied on since the actual purity may vary by supplier). Each burner has a specific propane gas flow rate set with its respective, calibrated flowmeter. The gas flow rate to the top burner is 12.9 liters per minute (''L/min'') ± 0.1 L/min at a pressure of 101 ± 5 kPa (standard atmospheric pressure) and a temperature of 22 ± 3 °C. The gas flow rate to the side burner is 6.6 ± 0.05 L/min at a pressure of 101 ± 5 kPa (standard atmospheric pressure) and a temperature of 22 ± 3 °C. The total heat release rate of the burners is 27 kW.

(b) *Calibration of Propane Flowmeters.* (1) *Preparation.* Once the assembly of the burner is completed and all the connecting points are checked for gas leakage, the most critical task is ensuring the exact flow rates of propane into the top and side burners, as described in the test protocol. The gas flow rates are specified at 12.9 Liters per minute (LPM) ± 0.1 LPM and 6.6 LPM ± 0.05 LPM for the top and side burners (Burners 1 and 2), respectively, at a pressure of 101 ± 5 kiloPascal (kPa) (standard atmospheric pressure) and a temperature of 22 ± 3 °C. The rotameters that are installed in the control box of the burner assembly need to be calibrated for accurate measurement of these flow rates.

(i) The most practical and accurate method of measuring and calibrating the flow rate of gases (including propane) is use of a diaphragm test meter (also called a dry test meter). A diaphragm test meter functions based on positive displacement of a fixed volume of gas per rotation and its reading is therefore independent of the type of the gas being used. The gas pressure and temperature, however, can have significant impact on the measurement of flow rate.

(ii) The gas pressure downstream of the rotameters that are installed in the control box of the burner assembly should be maintained near atmospheric pressure (only a few millimeters of water above atmosphere). Therefore, the best location to place the diaphragm test meter for gas flow calibration is right downstream of the control box. The pressure at the propane tank must be set at 20 ± 0.5 pounds per square inch gage (psig).

(2) *Calibration Procedure.* Install the diaphragm test meter (DTM) downstream of the control box in the line for the top burner. Check all connecting points for gas leakage. Open the main valve on the propane tank and set a pressure of 20 ± 0.5 psig. Set the timers in the control box for 999 seconds (or the maximum range possible). Record the barometric pressure. Turn the ''Burner 1'' switch to ON and ignite the top burner. Allow the gas to flow for 2–3 minutes until the DTM is stabilized. Record the pressure and temperature in the DTM. Use a stopwatch to record at least one minute worth of complete rotations while counting the number of rotations.[3] Calculate the propane gas flow rate using the recorded time and number of rotations (total flow in that time). Use the pressure and temperature readings to convert to standard conditions. Repeat this measurement for two additional meter setting to allow for calibrating the flowmeter throughout the range of interest. Plot the flow versus meter reading, fit a best line (possibly quadratic) through these points to find the meter setting for a flow of 12.9 LPM at the above ''standard conditions.'' Repeat this procedure for ''Burner 2'' using three meter readings to find the setting that gives a flow rate of 6.6 LPM at the standard conditions. After completion of the calibration, re-set the timers to 70 and 50 seconds.

(c) *Conditioning.* Remove the specimens from any packaging prior to conditioning. Specimens shall be conditioned in air at a temperature greater than 18 °C (65 °F) and less than 25 °C (77 °F) and a relative humidity less than 55 percent for at least 48 continuous hours prior to test. Specimens shall be supported in a manner to permit free movement of air around them during conditioning.

(d) *Test preparation.* (1) *General.* Horizontal air flow at a distance of 0.5 m (20 in) on all sides of the test specimen at the mattress top height shall be 0.5 m/s. If there is any visual evidence that the burner flames are disturbed by drafts during their exposure durations, the burner regions must be enclosed on two or more sides by at least a triple layer of screen wire. The screens shall be at least 25 cm tall. The screen(s) for the top burner shall sit on the mattress top and shall be wide enough to extend beyond the area of the burner impingement. All screens shall be far enough away (typically 30 cm or more) from the burner tubes so as not to interfere or interact with flame spread during the burner exposure. The screen for the side burner will require a separate support from below. All screens shall be removed at the end of the 70 second exposure interval.

(2) *Specimen.* Remove the test specimen from the conditioning room immediately before it is to be tested. Testing shall begin within 20 minutes after removal from the conditioning area. Be sure the bed frame is approximately centered on the catch surface. Place the specimen on the bed frame. Carefully center them on the bed

[2] If the side burner, or more commonly one half of the side burner, fails to ignite quickly, adjust the position of the igniter, bearing in mind that propane is heavier than air. The best burner behavior test assessment is done against an inert surface (to spread the gas as it would during an actual test).

[3] With a diaphragm test meter well-sized to this application, this should be more than five rotations. A one liter per rotation meter will require 10 to 15 rotations for the flow measurements and greater than the minimum of one minute recording time specified here.

frame and on each other. The mattress shall be centered on top of the foundation (see Figure 1 of this part). However, in order to keep the heat flux exposure the same for the sides of the two components, if the mattress is 1 cm to 2 cm narrower than the foundation, the mattress shall be shifted so that the side to be exposed is in the same plane as the foundation. Refer to Figure 8 of this part. A product having an intended sleep surface on only one side shall be tested with the sleeping side up so that the sleeping surface is exposed to the propane burner.

(e) *Burner flow rate/flow timer confirmation.* Just prior to moving the burner adjacent to the test specimen, briefly ignite each burner at the same time, and check that the propane flow to that burner is set at the appropriate level on its flowmeter to provide the flows listed in § 1633.7(a)(6)(ix). Check that the timers for the burner exposures are set to 70 seconds for the top burner and 50 seconds for the side burner. For a new burner assembly, check the accuracy of the gas flow timers against a stop watch at these standard time settings. Set pilot flows to a level that will not cause them to impinge on sample surfaces.

(f) *Location of the gas burners.* Place the burner heads so that they are within 300 mm (1 ft) of the mid-length of the mattress. If there are unique construction features (e.g., handles, zippers) within the burner placement zone, the burner shall impinge on this feature. The general layout for the room configuration is shown in Figure 2 of this part. For a quilted mattress top the stand-off foot pad must alight on a high, flat area between dimples or quilting thread runs. The same is to be true for the side burner if that surface is quilted. If a specimen design presents a conflict in placement such that both burners cannot be placed between local depressions in the surface, the top burner shall be placed at the highest flat surface.

(g) *Burner set-up.* The burners shall be placed in relation to the mattress and foundation surfaces in the manner shown in Figure 9 of this part, i.e., at the nominal spacings shown there and with the burner tubes nominally parallel [4] to the mattress surfaces on which they impinge. Since the heat flux levels seen by the test specimen surfaces depend on burner spacing, as well as gas flow rate, care must be taken with the set-up process.

(h) *Burner alignment procedure.* (1) *Preparation.* Complete the following before starting the alignment procedure:

(i) Check that the pivot point for the mattress top burner feed tube and the two metal plates around it are clean and well-lubricated so as to allow smooth, free movement.

(ii) Set the two burners such that the 5° out-of-plane angling of the flame jets makes the jets on the two burners point slightly *toward* each other.

(iii) Check the burner stand-off feet for straightness and perpendicularity between foot pad and support rod and to see that they are clean of residue from a previous test.

(iv) Have at hand the following items to assist in burner set-up: The jig, shown in Figure 10 of this part, for setting the stand-off feet at their proper distances from the front of the burner tube; a 3 mm thick piece of flat stock (any material) to assist in checking the parallelness of the burners to the mattress surfaces; and a 24 gage stainless steel sheet metal platen that is 30 mm (12 in) wide, 610 mm (24 in) long and has a sharp, precise 90° bend 355 mm (14 in) from one 30 mm wide end. Refer to Figure 8 of this part.

(2) *Alignment.* (i) Place the burner assembly adjacent to the test specimen. Place the sheet metal platen on the mattress with the shorter side on top. The location shall be within 30 cm (1 ft) of the longitudinal center of the mattress. The intended location of the stand-off foot of the top burner shall not be in a dimple or crease caused by the quilting of the mattress top. Press the platen laterally inward from the edge of the mattress so that its side makes contact with either the top and bottom edge or the vertical side of the mattress.[5] Use a 20 cm (8 in) strip of duct tape (platen to mattress top) to hold the platen firmly inward in this position.

(ii) With both burner arms horizontal (pinned in this position), fully retract the stand-off feet of both burners and, if necessary, the pilot tubes as well.[6] (Neither is to protrude past the front face of the burner tubes at this point.) Move the burner assembly forward (perpendicular to the mattress) until the vertical burner lightly contacts the sheet metal platen. Adjust the height of the vertical burner on its vertical support column so as to center the tube on the crevice between the mattress and the foundation. (This holds also for pillow top mattress tops, i.e., ignore the crevice between the pillow top and the main body of the mattress.)[7] Adjust the height of the horizontal burner until it sits lightly on top of the sheet metal platen. Its burner arm should then be horizontal.

(iii) Move the horizontal burner in/out (loosen the thumb screw near the pivot point) until the outer end of the burner tube is 13 mm to 19 mm (½ in to ¾ in) from the corner bend in the platen (this is facilitated by putting a pair of lines on the top of the platen 13 mm and 19 mm from the bend and parallel to it). Tighten the thumb screw.

(iv) Make the horizontal burner parallel to the top of the platen (within 3 mm, ⅛ in over the burner tube length) by bending the copper tube section appropriately. Note: After the platen is removed (in paragraph (h)(2)(vii) of this section), the burner tube may not be horizontal; this is normal. For mattress/foundation combinations having nominally flat, vertical sides, the similar adjustment for the vertical burner is intended to make that burner parallel to the sides and vertical. Variations in the shape of mattresses and foundations can cause the platen section on the side to be non-flat and/or non-vertical. If the platen is flat and vertical, make the vertical burner parallel to the side of the platen (± 3 mm) by bending its copper tube section as needed. If not, make the side burner parallel to the mattress/foundation sides by the best visual estimate after the platen has been removed.

(v) Move the burner assembly perpendicularly back away from the mattress about 30 cm (1 ft). Set the two stand-off feet to their respective distances using the jig designed for this purpose. Install the jig *fully* onto the burner tube (on the *same side* of the tube as the stand-off foot), with its side edges parallel to the burner feed arm, at

[4] The top burner will tend to be tangential to the mattress surface at the burner mid-length; this orientation will not necessarily be parallel to the overall average mattress surface orientation nor will it necessarily be horizontal. This is a result of the shape of the mattress top surface.

[5] Mattresses having a convex side are treated separately since the platen cannot be placed in the above manner. Use the platen only to set the top burner parallelness. Set the in/out distance of the top burner to the specification in paragraph (h)(1)(iii). Set the side burner so that it is approximately (visually) parallel to the flat side surface of the foundation below the mattress/foundation crevice once its foot is in contact with the materials in the crevice area. The burner will not be vertical in this case. If the foundation side is also non-flat, set the side burner vertical (± 3 mm, as above) using a bubble level as a reference. The side surface convexities will then bring the bowed out sections of the specimen closer to the burner tube than the stand-off foot.

[6] The pilot tubes can normally be left with their ends just behind the plane of the front of the burner tube. This way they will not interfere with positioning of the tube but their flame will readily ignite the burner tubes.

[7] For tests of the mattress alone, set the center of the side burner at the lower edge of the mattress OR the top (upper tip) of the side burner 25 mm (1 in) below the top edge of the mattress, whichever is lower. This prevents inappropriate (excessive) exposure of the top surface of the mattress to the side burner.

about the position where one end of the foot will be. Loosen the set screw and slide the foot out to the point where it is flush with the bottom end of the jig. Tighten the set screw. Make sure the long axis of the foot is parallel to the burner tube. It is essential to use the correct side of the spacer jig with each burner. Double check this. The jig must be clearly marked.

(vi) Set the downward force of the horizontal burner. Remove the retainer pin near the pivot. While holding the burner feed arm horizontal using a spring scale [8] hooked onto the thumbscrew holding the stand-off foot, move the small and/or large weights on the feed tube appropriately so that the spring scale reads 170 g to 225 g (6 oz to 8 oz).

(vii) Remove the sheet metal platen (and tape holding it).

(viii) Hold the horizontal burner up while sliding the burner assembly forward until its stand-off foot just touches the mattress and/or the foundation,[9] then release the horizontal burner. The outer end of the burner tube should extend at least 6 mm to 12 mm (¼ in to ½ in) out beyond the uppermost corner/edge of the mattress so that the burner flames will hit the edge. (For a pillow top mattress, this means the outer edge of the pillow top portion and the distance may then be greater than 6 mm to 12 mm.) If this is not the case, move the burner assembly (perpendicular to the mattress side)—not the horizontal burner alone—until it is. Finally, move the vertical burner tube until its stand-off foot just touches the side of the mattress and/or the foundation. (Use the set screw near the vertical burner pivot.)

(ix) Make sure all thumbscrews are adequately tightened. Care must be taken, once this set-up is achieved, to avoid bumping the burner assembly or disturbing the flexible lines that bring propane to it.

(x) If there is *any* indication of flow disturbances in the test facility which cause the burner flames or pilot flames to move around, place screens around the burners so as to minimize these disturbances.[10] These screens (and any holders) must be far enough away from the burners (about 30 cm or more for the top, less for the side) so that they do not interact with the flames growing on the specimen surfaces. For the top surface burner, at least a triple layer of window screen approximately 30 cm high sitting vertically on the mattress top (Figure 9 of this part) has proved satisfactory. For the side burner at least a triple layer of screen approximately 15 cm wide, formed into a square-bottom U-shape and held from below the burner has proved satisfactory. Individual laboratories will have to experiment with the best arrangement for suppressing flow disturbances in their facility.

(i) *Running the test.* (1) Charge the hose line to be used for fire suppression with water.

(2) *Burner Preparation.* (i) Turn AC power on; set propane pressure to 20 psig at bottle; set timers to 70 s (top burner) and 50 s (side burner); with burner assembly well-removed from test specimen, ignite burners and check that, WHEN BOTH ARE ON AT THE SAME TIME, the flowmeters are set to the values that give the requisite propane gas flow rates to each burner. Turn off burners. Set pilot tubes just behind front surface of burners; set pilot flow valves for ca. 2 cm flames. Turn off pilots.

(ii) Position burner on test specimen and remove sheet metal platen.

(iii) Place screens around both burners.

(3) *Start pilots.* Open pilot ball valves one at a time and ignite pilots with hand-held flame; adjust flame size if necessary being very careful to avoid a jet flame that could prematurely ignite the test specimen (Note that after a long interval between tests the low pilot flow rate will require a long time to displace air in the line and achieve the steady-state flame size.)

(4) *Start recording systems.* With the calorimetry system fully operational, after instrument zeroes and spans, start the video lights and video camera and data logging systems two minutes before burner ignition (or, if not using video, take a picture of the setup).

(5) *Initiate test.* Start test exposure by simultaneously turning on power to both timers (timers will turn off burners at appropriate times). Also start a 30 minute timer of the test duration. Check/adjust propane flow rates (DO THIS ESSENTIAL TASK IMMEDIATELY. Experience shows the flow will not remain the same from test-to-test in spite of fixed valve positions so adjustment is essential.) If not using video, one photo must be taken within the first 45 seconds of starting the burners.

(6) *End of burner exposure.* When the burners go out (after 70 seconds for the longer exposure), carefully lift the top burner tube away from the specimen surface, producing as little disturbance as possible to the specimen. Turn off power to both timers. Remove all screens. Turn off pilots at their ball valves. Remove the burner assembly from the specimen area to facilitate the video camera view of the full side of the specimen. In the case of the room-based configurations, remove the burner assembly from the room to protect it.

(j) *Video Recording/Photographs.* Place a video or still frame camera so as to have (when the lens is zoomed out) just slightly more than a full-length view of the side of the test specimen being ignited, including a view of the flame impingement area while the burner assembly is present. The view must also include the catch pan so that it is clear whether any melt pool fire in this pan participates significantly in the growth of fire on the test specimen. The camera shall include a measure of elapsed time to the nearest 1 second for video and 1 minute for still frame within its recorded field of view (preferably built into the camera). For the room-based configuration, the required full-length view of the sample may require an appropriately placed window, sealed with heat resistant glass, in one of the room walls. Place the camera at a height just sufficient to give a view of the top of the specimen while remaining under any smoke layer that may develop in the room. The specimen shall be brightly lit so that the image does not lose detail to over-exposed flames. This will require a pair or more of 1 kW photo flood lights illuminating the viewed side of the specimen. The lights may need to shine into the room from the outside via sealed windows.

(k) *Cessation of Test.* (1) The heat release rate shall be recorded and video/photographs taken until either 30 minutes has elapsed since the start of the burner exposure or a fire develops of such size as to require suppression for the safety of the facility.

(2) Note the time and nature of any unusual behavior that is not fully within the view of the video camera. This is most easily done by narration to a camcorder.

[8] An acceptable spring scale has a calibrated spring mounted within a holder and hooks on each end.

[9] The foot should depress the surface it first contacts by no more than 1 mm to 2 mm. This is best seen up close, not from the rear of the burner assembly. However, if a protruding edge is the first item contacted, compress it until the foot is in the plane of the mattress/foundation vertical sides. The intent here is that the burner be spaced a fixed distance from the vertical mattress/foundation sides, not from an incidental protrusion. Similarly, if there is a wide crevice in this area which would allow the foot to move inward and thereby place the burners too close to the vertical mattress/foundation sides, it will be necessary to use the spacer jig (rather than the stand-off foot) above or below this crevice to set the proper burner spacing. Compress the mattress/foundation surface 1 mm to 2 mm when using the jig for this purpose.

[10] The goal here is to keep the burner flames impinging on a fixed area of the specimen surface rather than wandering back and forth over a larger area.

(3) Run the heat release rate system and datalogger until the fire has been fully out for several minutes to allow the system zero to be recorded.

(l) *Use of alternate apparatus.* Mattress sets may be tested using test apparatus that differs from that described in this section if the manufacturer obtains and provides to the Commission data demonstrating that tests using the alternate apparatus during the procedures specified in this section yield failing results as often as, or more often than, tests using the apparatus specified in the standard. The manufacturer shall provide the supporting data to the Office of Compliance, Recalls & Compliance Division, U.S. Consumer Product Safety Commission, 4330 East West Highway, Bethesda, Maryland 20814. Staff will review the data and determine whether the alternate apparatus may be used.

§ 1633.8 Findings.

(a) *General.* In order to issue a flammability standard under the FFA, the FFA requires the Commission to make certain findings and to include these in the regulation, 15 U.S.C. 1193(j)(2). These findings are discussed in this section.

(b) *Voluntary standards.* No findings concerning compliance with and adequacy of a voluntary standard are necessary because no relevant voluntary standard addressing the risk of injury that is addressed by this regulation has been adopted and implemented.

(c) *Relationship of benefits to costs.* The Commission estimates the potential total lifetime benefits of a mattress that complies with this standard to range from $45 to $57 per mattress set (based on a 10 year mattress life and a 3% discount rate). The Commission estimates total resource costs of the standard to range from $8 to $22 per mattress. This yields net benefits of $23 to $50 per mattress set. The Commission estimates that aggregate lifetime benefits associated with all mattresses produced the first year the standard becomes effective range from $1,024 to $1,307 million, and that aggregate resource costs associated with these mattresses range from $175 to $511 million, yielding net benefits of about $514 to $1,132 million. Accordingly, the Commission finds that the benefits from the regulation bear a reasonable relationship to its costs.

(d) *Least burdensome requirement.* The Commission considered the following alternatives: alternative maximum peak heat release rate and test duration, alternative total heat released in the first 10 minutes of the test, mandatory production testing, a longer effective date, taking no action, relying on a voluntary standard, and requiring labeling alone (without any performance requirements). The alternatives of taking no action, relying on a voluntary standard (if one existed), and requiring labeling alone are unlikely to adequately reduce the risk. Requiring a criterion of 25 MJ total heat release during the first 10 minutes of the test instead of 15 MJ would likely reduce the estimated benefits (deaths and injuries reduced) without having much effect on costs. Both options of increasing the duration of the test from 30 minutes to 60 minutes and decreasing the peak rate of heat release from 200 kW to 150 kW would likely increase costs significantly without substantial increase in benefits. Requiring production testing would also likely increase costs. Therefore, the Commission finds that an open flame standard for mattresses with the testing requirements and criteria that are specified in the Commission rule is the least burdensome requirement that would prevent or adequately reduce the risk of injury for which the regulation is being promulgated.

§ 1633.9 Glossary of terms.

(a) *Absorbent pad.* Pad used on top of mattress. Designed to absorb moisture/body fluids thereby reducing skin irritation, can be one time use.

(b) *Basket pad.* Cushion for use in an infant basket.

(c) *Bunk beds.* A tier of beds, usually two or three, in a high frame complete with mattresses (see Figure 11 of this part).

(d) *Car bed.* Portable bed used to carry a baby in an automobile.

(e) *Carriage pad.* Cushion to go into a baby carriage.

(f) *Chaise lounge.* An upholstered couch chair or a couch with a chair back. It has a permanent back rest, no arms, and sleeps one (see Figure 11).

(g) *Convertible sofa.* An upholstered sofa that converts into an adult sized bed. Mattress unfolds out and up from under the seat cushioning (see Figure 11).

(h) *Corner groups.* Two twin size bedding sets on frames, usually slipcovered, and abutted to a corner table. They also usually have loose bolsters slipcovered (see Figure 11).

(i) *Crib bumper.* Padded cushion which goes around three or four sides inside a crib to protect the baby. Can also be used in a playpen.

(j) *Daybed.* Daybed has foundation, usually supported by coil or flat springs, mounted between arms on which mattress is placed. It has permanent arms, no backrest, and sleeps one (see Figure 11).

(k) *Dressing table pad.* Pad to cushion a baby on top of a dressing table.

(l) *Drop-arm loveseat.* When side arms are in vertical position, this piece is a loveseat. The adjustable arms can be lowered to one of four positions for a chaise lounge effect or a single sleeper. The vertical back support always remains upright and stationary (see Figure 11).

(m) *Futon.* A flexible mattress generally used on the floor that can be folded or rolled up for storage. It usually consists of resilient material covered by ticking.

(n) *High riser.* This is a frame of sofa seating height with two equal size mattresses without a backrest. The frame slides out with the lower mattress and rises to form a double or two single beds (see Figure 11).

(o) *Infant carrier and lounge pad.* Pad to cushion a baby in an infant carrier.

(p) *Mattress foundation.* This is a ticking covered structure used to support a mattress or sleep surface. The structure may include constructed frames, foam, box springs or other materials used alone or in combination.

(q) *Murphy bed.* A style of sleep system where the mattress and foundation are fastened to the wall and provide a means to retract or rotate the bed assembly into the wall to release more floor area for other uses.

(r) *Pillow.* Cloth bag filled with resilient material such as feathers, down, sponge rubber, urethane, or fiber used as the support for the head of a person.

(s) *Playpen pad.* Cushion used on the bottom of a playpen.

(t) *Portable crib.* Smaller size than a conventional crib. Can usually be converted into a playpen.

(u) *Quilted* means stitched with thread or by fusion through the ticking and one or more layers of material.

(v) *Roll-away-bed.* Portable bed which has frame that folds with the mattress for compact storage.

(w) *Sleep lounge.* Upholstered seating section which is mounted on a frame. May have bolster pillows along the wall as backrests or may have attached headrests (see Figure 11).

(x) *Stroller pad.* Cushion used in a baby stroller.

(y) *Sofa bed.* These are pieces in which the back of the sofa swings down flat with the seat to form the sleeping surface. Some sofa beds have bedding boxes for storage of bedding. There are two types: the one-piece, where the back and seat are upholstered as a unit, supplying an unbroken sleeping surface; and the two-piece, where back and seat are upholstered separately (see Figure 11 of this part).

(z) *Sofa lounge*—(includes glideouts). Upholstered seating section is mounted on springs and in a frame that permit it to be pulled out for sleeping. Has upholstered backrest bedding box that is hinged. Glideouts are single sleepers with sloping seats and backrests. Seat pulls out from beneath back and evens up to supply level sleeping surface (see Figure 11).

(aa) *Studio couch.* Consists of upholstered seating section on upholstered foundation. Many types convert to twin beds (see Figure 11).

(bb) *Studio divan.* Twin size upholstered seating section with foundation is mounted on metal bed frame. Has no arms or backrest, and sleeps one (see Figure 11 of this part).

(cc) *Trundle bed.* A low bed which is rolled under a larger bed. In some lines, the lower bed springs up to form a double or two single beds as in a high riser (see Figure 11).

(dd) *Tufted* means buttoned or laced through the ticking and upholstery material and/or core, or having the ticking and loft material and/or core drawn together at intervals by any other method which produces a series of depressions on the surface.

(ee) *Twin studio divan.* Frames which glide out (but not up) and use seat cushions, in addition to upholstered foundation to sleep two. Has neither arms nor back rest (see Figure 11).

(ff) *Flip or sleeper chair.* Chair that unfolds to be used for sleeping, typically has several connecting fabric covered, solid foam core segments.

Subpart B—Rules and Regulations

§ 1633.10 Definitions.

(a) *Standard* means the Standard for the Flammability (Open-Flame) of Mattress Sets (16 CFR part 1633, subpart A).

(b) The definition of terms set forth in the § 1633.2 of the Standard shall also apply to this section.

§ 1633.11 Records.

(a) *Test and manufacturing records C general.* Every manufacturer and any other person initially introducing into commerce mattress sets subject to the standard, irrespective of whether guarantees are issued relative thereto, shall maintain the following records in English at a location in the United States:

(1) Test results and details of each test performed by or for that manufacturer (including failures), whether for qualification, confirmation, or production, in accordance with § 1633.7. Details shall include: name and complete physical address of test facility, type of test room, test room conditions, time that sample spent out of conditioning area before starting test, prototype or production identification number, and test data including the peak rate of heat release, total heat release in first 10 minutes, a graphic depiction of the peak rate of heat release and total heat release over time. These records shall include the name and signature of person conducting the test, the date of the test, and a certification by the person overseeing the testing as to the test results and that the test was carried out in accordance with the Standard. For confirmation tests, the identification number must be that of the prototype tested.

(2) Video and/or a minimum of eight photographs of the testing of each mattress set, in accordance with § 1633.7 (one taken before the test starts, one taken within 45 seconds of the start of the test, and the remaining six taken at five minute intervals, starting at 5 minutes and ending at 30 minutes), with the prototype identification number or production lot identification number of the mattress set, date and time of test, and name and location of testing facility clearly displayed.

(b) *Prototype records.* In addition to the records specified in paragraph (a) of this section, the following records shall be maintained for each qualified, confirmed and subordinate prototype:

(1) Unique identification number for the qualified or confirmed prototype and a list of the unique identification numbers of each subordinate prototype based on the qualified or confirmed prototype. Subordinate prototypes that differ from each other only be length or width may share the same identification number.

(2) A detailed description of all materials, components, and methods of assembly for each qualified, confirmed and subordinate prototype. Such description shall include the specifications of all materials and components, and the name and complete physical address of each material and component supplier.

(3) A list of which models and production lots of mattress sets are represented by each qualified, confirmed and/or subordinate prototype identification number.

(4) For subordinate prototypes, the prototype identification number of the qualified or confirmed prototype on which the mattress set is based, and, at a minimum, the manufacturing specifications and a description of the materials substituted, photographs or physical specimens of the substituted materials, and documentation based on objectively reasonable criteria that the change in any component, material, or method of assembly will not cause the subordinate prototype to exceed the test criteria specified in § 1633.3(b).

(5) Identification, composition, and details of the application of any flame retardant treatments and/or inherently flame resistant fibers or other materials employed in mattress components.

(c) *Pooling confirmation test records.* In addition to the test and prototype records specified in paragraphs (a) and (b) of this section, the following records shall be maintained:

(1) The prototype identification number assigned by the qualified prototype manufacturer;

(2) Name and complete physical address of the qualified prototype manufacturer;

(3) Copy of qualified prototype test records, and records required by paragraph (b)(2) of this section; and

(4) In the case of imported mattress sets, the importer shall be responsible for maintaining the records specified in paragraph (b) of this section for confirmation testing that has been performed with respect to mattress sets produced by each foreign manufacturing facility whose mattress sets that importer is importing.

(d) *Quality assurance records.* In addition to the records required by paragraph (a) of this section, the following quality assurance records shall be maintained:

(1) A written copy of the manufacturer's quality assurance procedures;

(2) Records of any production tests performed. Production test records must be maintained and shall include, in addition to the requirements of paragraph (a) of this section, an assigned production lot identification number and the identification number of the qualified, confirmed or subordinate prototype associated with the specimen tested;

(3) For each qualified, confirmed and subordinate prototype, the number of mattress sets in each production lot based on that prototype;

(4) The start and end dates of production of that lot; and

(5) Component, material and assembly records. Every manufacturer conducting tests and/or technical evaluations of components and materials and/or methods of assembly must maintain detailed records of such tests and evaluations.

(e) *Record retention requirements.* The records required under this Section shall be maintained by the manufacturer (including importers) for as long as mattress sets based on the prototype in question are in production and shall be

retained for 3 years thereafter. Records shall be available upon the request of Commission staff.

(f) Record location requirements. (1) For mattress sets produced in the United States, all records required by this section must be maintained at the plant or factory at which the mattress sets are manufactured or assembled.

(2) For mattress sets produced outside of the United States, a copy of all records required by this section must be maintained at a U.S. location, which must be identified on the mattress set label as specified in § 1633.12(a).

§ 1633.12 Labeling.

(a) Each mattress set subject to the Standard shall bear a permanent, conspicuous, and legible label(s) containing the following information (and no other information) in English:

(1) Name of the manufacturer, or for imported mattress sets, the name of the foreign manufacturer and importer;

(2)(i) For mattress sets produced in the United States, the complete physical address of the manufacturer.

(ii) For imported mattress sets, the complete address of the foreign manufacturer, including country, and the complete physical address of the importer or the United States location where the required records are maintained if different from the importer;

(3) Month and year of manufacture;

(4) Model identification;

(5) Prototype identification number for the mattress set;

(6) A certification that the mattress complies with this standard.

(i) For mattresses intended to be sold without a foundation, a certification stating ''This mattress meets the requirements of 16 CFR part 1633 (federal flammability (open flame) standard for mattresses) when used without a foundation''; or

(ii) For mattresses intended to be sold with a foundation, a certification stating ''This mattress meets the requirements of 16 CFR part 1633 (federal flammability (open flame) standard for mattresses) when used with foundation <*ID*>.'' Such foundation(s) shall be clearly identified by a simple and distinct name and/or number on the mattress label; or

(iii) For mattresses intended to be sold both alone and with a foundation, a certification stating ''This mattress meets the requirements of 16 CFR part 1633 (federal flammability (open flame) standard for mattresses) when used without a foundation or with foundation(s) <*ID*>.''; and

(7) A statement identifying whether the manufacturer intends the mattress to be sold alone or with a foundation.

(i) For mattresses intended to be sold without a foundation, the label shall state ''THIS MATTRESS IS INTENDED TO BE USED WITHOUT A FOUNDATION.'' See Figures 16 and 17 of this part; or

(ii) For mattresses intended to be sold with a foundation, the label shall state ''THIS MATTRESS IS INTENDED TO BE USED WITH FOUNDATION(S): <*Foundation ID*>.'' See Figures 12 and 13 of this part; or

(iii) For mattresses intended to be sold both alone and with a foundation, the label shall state ''THIS MATTRESS IS INTENDED TO BE USED WITHOUT A FOUNDATION OR WITH FOUNDATION(S): <*Foundation ID*>.'' See Figures 14 and 15 of this part.

(b) The mattress label required in paragraph (a) of this section must measure 2¾″ in width and the length can increase as needed for varying information. The label must be white with black text. The label text shall comply with the following format requirements:

(1) All information specified in paragraphs (a)(1) through (6) of this section must be in 6-point font or larger with mixed uppercase and lowercase letters. The text must be left justified and begin ¼″ from left edge of label. See Figure 12–17 of this part.

(2) The statement specified in paragraph (a)(7)(i) of this section must be in 10-point Arial/Helvetica font or larger, uppercase letters with the words ''***WITHOUT* A FOUNDATION**'' bolded and the word ''***WITHOUT***'' in italics. The text shall be centered in a text box with the width measuring 2½″ and the length increasing as needed. See Figures 16 and 17 of this part.

(3) The statement specified in paragraph (a)(7)(ii) of this section must be in 10-point Arial/Helvetica font or larger in uppercase letters. The foundation identifier should be in 12-point font or larger, bolded, and underlined. The text shall be centered in a text box with the width measuring 2½″ and the length increasing as needed. See Figures 12 and 13 of this part.

(4) The statement specified in paragraph (a)(7)(iii) of this section must be in 10-point or larger Arial/Helvetica font, uppercase letters with the words ''***WITHOUT* A FOUNDATION OR**'' bolded and the word ''***WITHOUT***'' in italics. The foundation identifier should be in 12-point font or larger, bolded, and underlined. The text shall be centered in a text box with the width measuring 2½″ and the length increasing as needed. See Figures 14 and 15 of this part.

(c) The foundation label required in paragraph (a) of this section must measure 2¾″ in width and the length can increase as needed for varying information. The label must be white with black text. The label shall contain the following:

(1) The information specified in paragraphs (a)(1) through (5) of this section; and

(2) The words ''Foundation ID:'' followed by a distinct name and/or number that corresponds to the name and/or number used on the mattress. This text must be in 10-point or larger bold Arial/Helvetica font, and the foundation identifier must be underlined. See Figures 12 through 15 of this part.

(d) The statements specified in paragraphs (a)(7(i) and (a)(7)(ii), and (a)(7)(iii) of this section may be translated into any other language and printed on the reverse (blank) side of the label.

(e) No person, other than the ultimate consumer, shall remove or mutilate, or cause or participate in the removal or mutilation of, any label required by this section to be affixed to any item.

§ 1633.13 Tests for guaranty purposes, compliance with this section, and ''one of a kind'' exemption.

(a) *Tests for guaranty purposes.* Reasonable and representative tests for the purpose of issuing a guaranty under section 8 of the Flammable Fabrics Act, 15 U.S.C. 1197, for mattress sets subject to the Standard shall be the tests performed to show compliance with the Standard.

(b) *Compliance with this section.* No person subject to the Flammable Fabrics Act shall manufacture for sale, import, distribute, or otherwise market or handle any mattress set which is not in compliance with the provisions under Subpart B.

(c) *''One of a kind'' exemption for physician prescribed mattresses.* (1)(i) A mattress set manufactured in accordance with a physician's written prescription or manufactured in accordance with other comparable written medical therapeutic specification, to be used in connection with the treatment or management of a named individual's physical illness or injury, shall be considered a ''one of a kind mattress'' and shall be exempt from testing under the Standard pursuant to § 1633.7 thereof: Provided, that the mattress set bears a permanent, conspicuous and legible label which states:

WARNING: This mattress set may be subject to a large fire if exposed to an open flame. It was manufactured in accordance

with a physician's prescription and has not been tested under the Federal Standard for the Flammability (Open-Flame) of Mattress Sets (16 CFR part 1633).

(ii) Such labeling must be attached to the mattress set so as to remain on or affixed thereto for the useful life of the mattress set. The label must be at least 40 square inches (250 sq. cm) with no linear dimension less than 5 inches (12.5 cm). The letters in the word ''WARNING'' shall be no less than 0.5 inch (1.27 cm) in height and all letters on the label shall be in a color which contrasts with the background of the label. The warning statement which appears on the label must also be conspicuously displayed on the invoice or other sales papers that accompany the mattress set in commerce from the manufacturer to the final point of sale to a consumer.

(2) The manufacturer of a mattress set exempted from testing under this paragraph (c) shall, in lieu of the records required to be kept by § 1633.10, retain a copy of the written prescription or other comparable written medical therapeutic specification for such mattress set during a period of three years, measured from the date of manufacture.

(3) For purposes of this regulation the term physician shall mean a physician, chiropractor or osteopath licensed or otherwise permitted to practice by any State of the United States.

BILLING CODE 6355–01–P

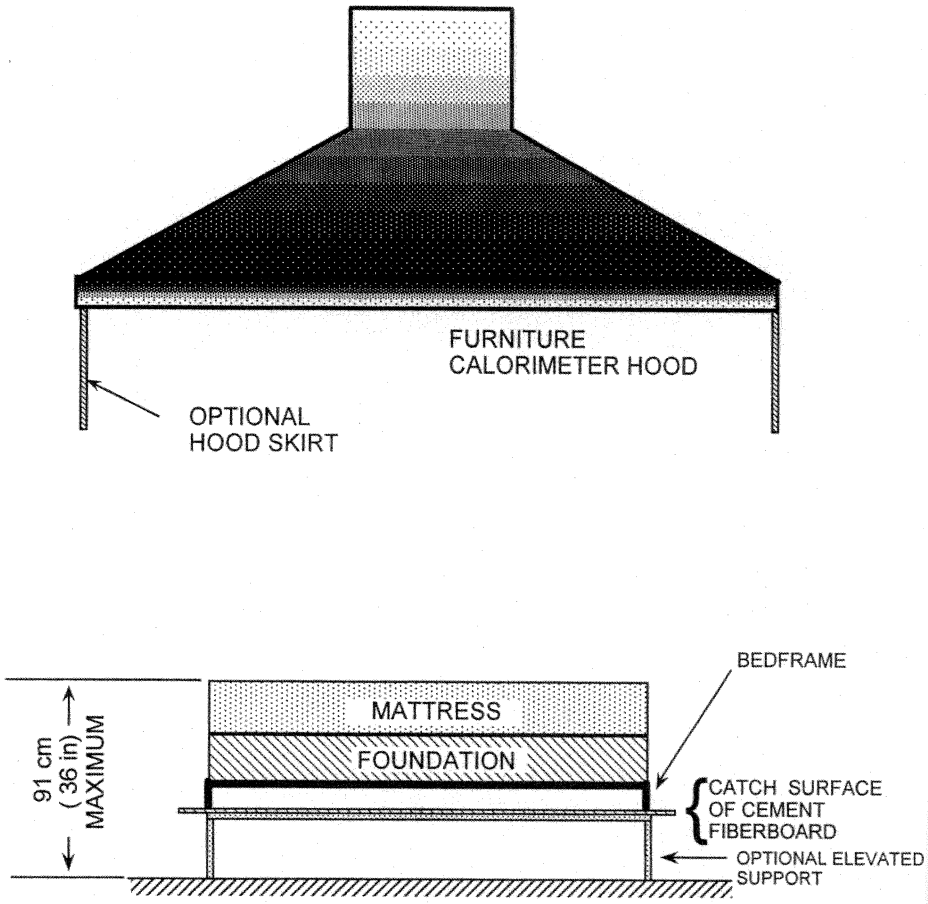

FIGURE 1. TEST ASSEMBLY, SHOWN IN FURNITURE CALORIMETER. (CONFIGURATION A.)

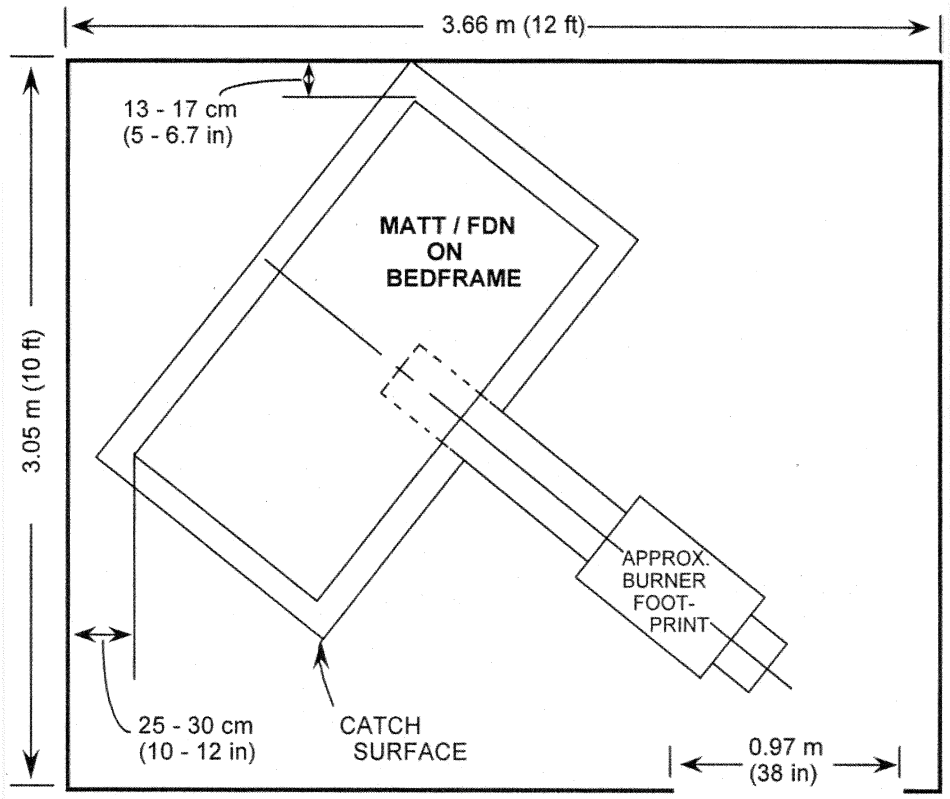

FIGURE 2. TEST ARRANGEMENT IN 3.05m X 3.66 m (10 ft x 12 ft) ROOM; CONFIGURATION B.

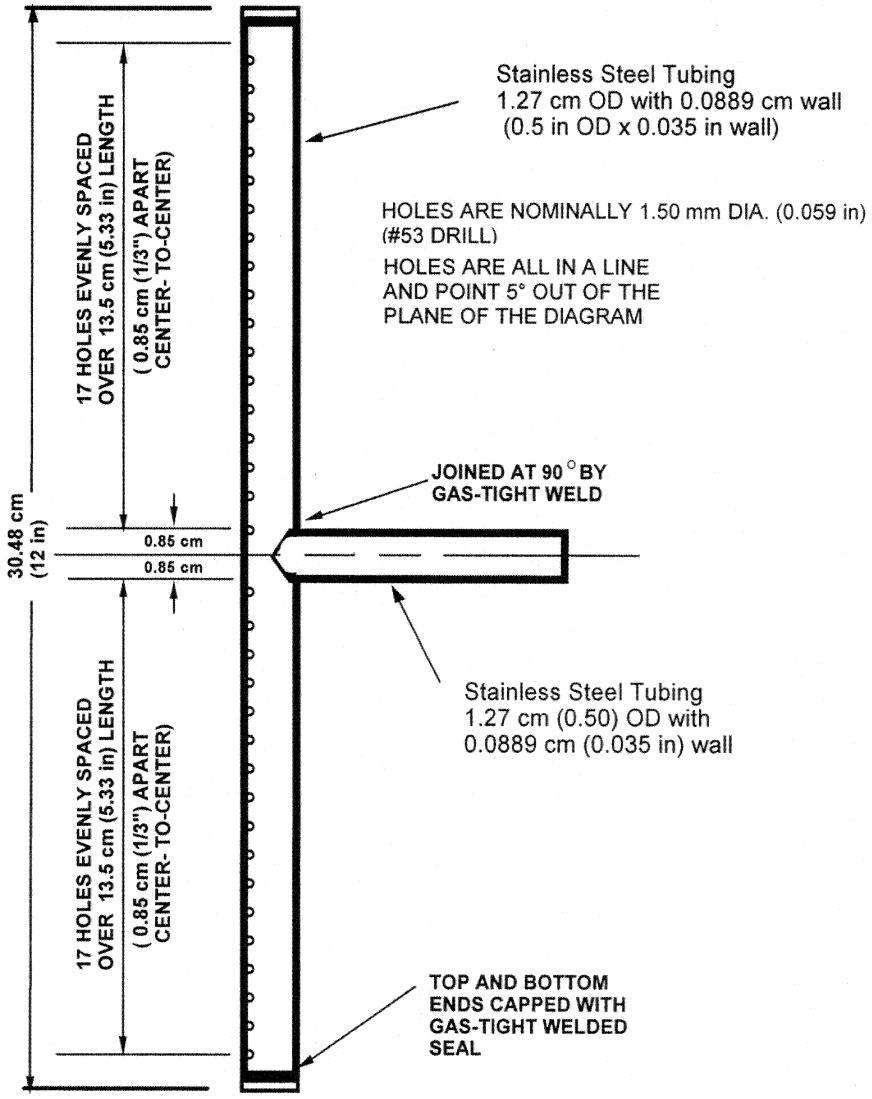

FIGURE 3. DETAILS OF HORIZONTAL BURNER HEAD.

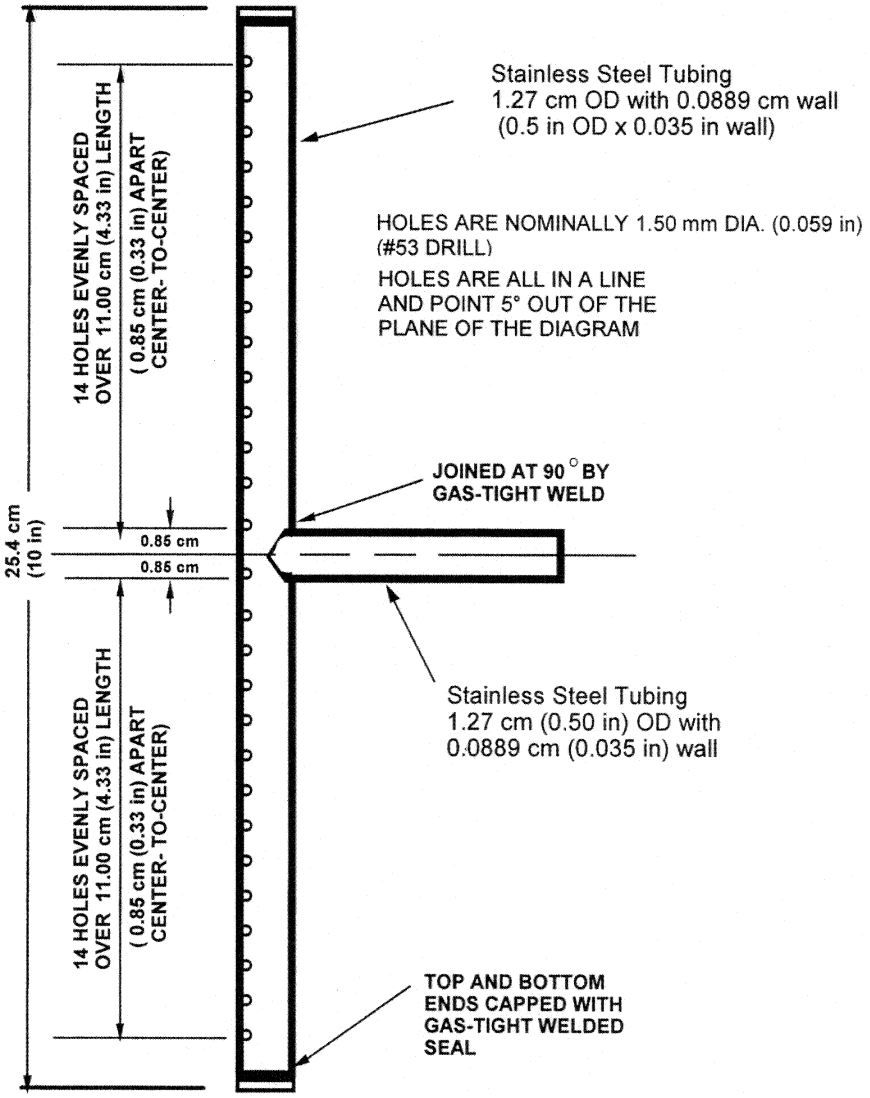

FIGURE 4. DETAILS OF VERTICAL BURNER HEAD.

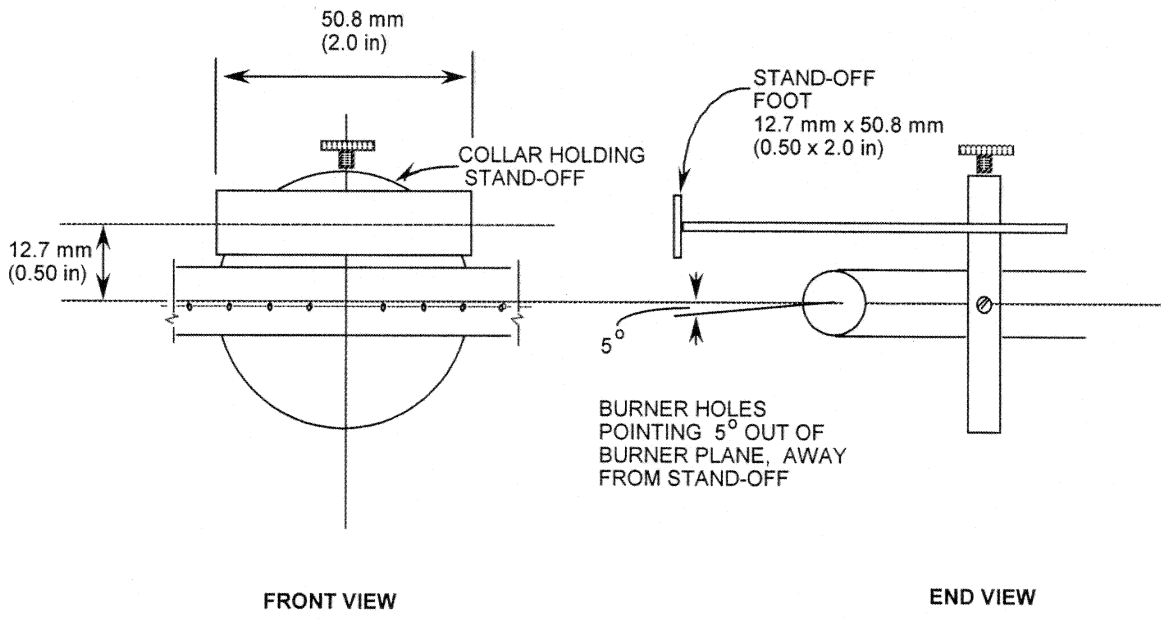

FIGURE 5. DETAILS OF BURNER STAND-OFF

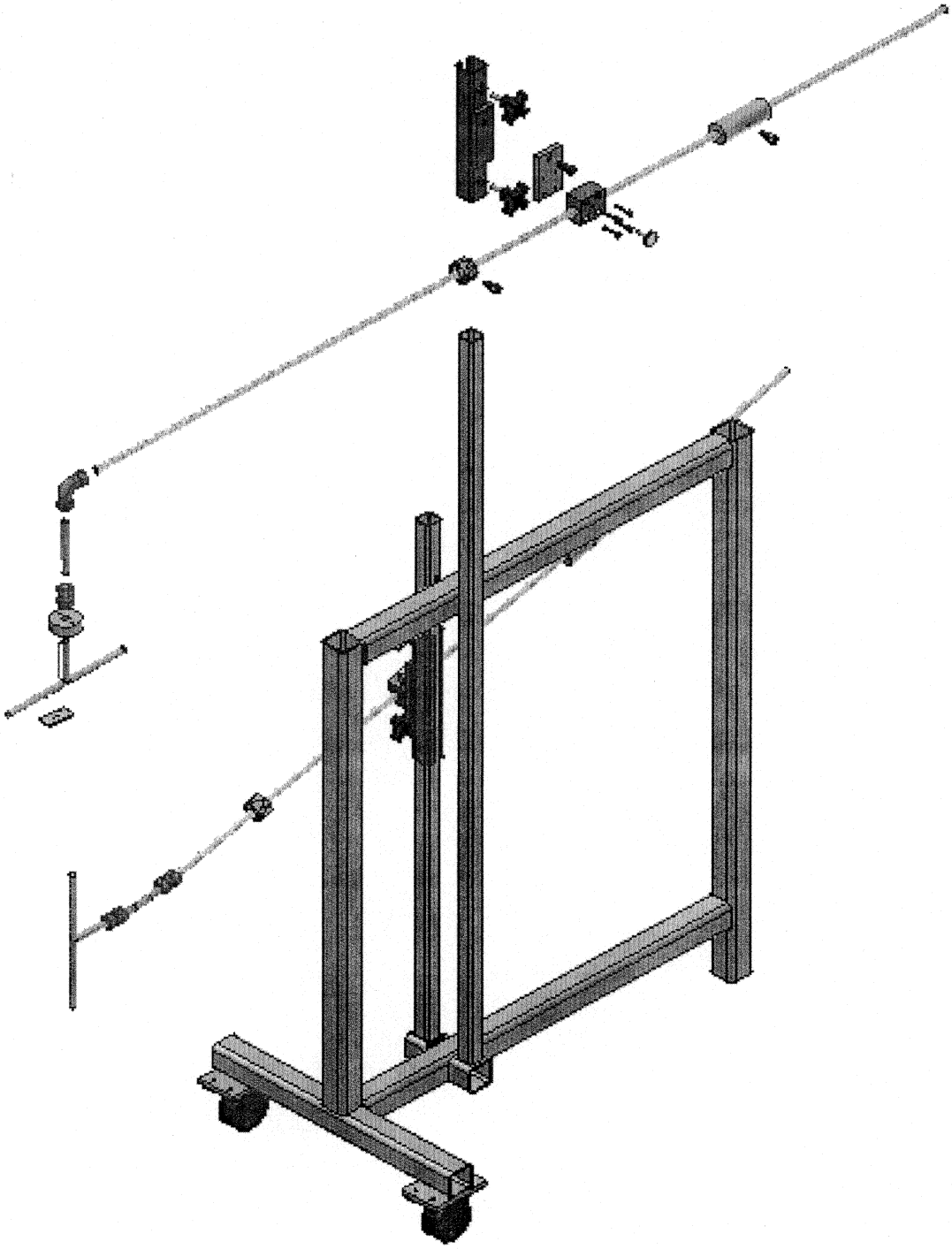

FIGURE 6. BURNER ASSEMBLY* SHOWING ARMS AND PIVOTS (Shoulder Screws), IN RELATION TO, PORTABLE FRAME ALLOWING BURNER HEIGHT ADJUSTMENT.

*Note that the feed tube for the side burner will be horizontal when the side burner pivot is locked in place, as is usual during a test exposure.

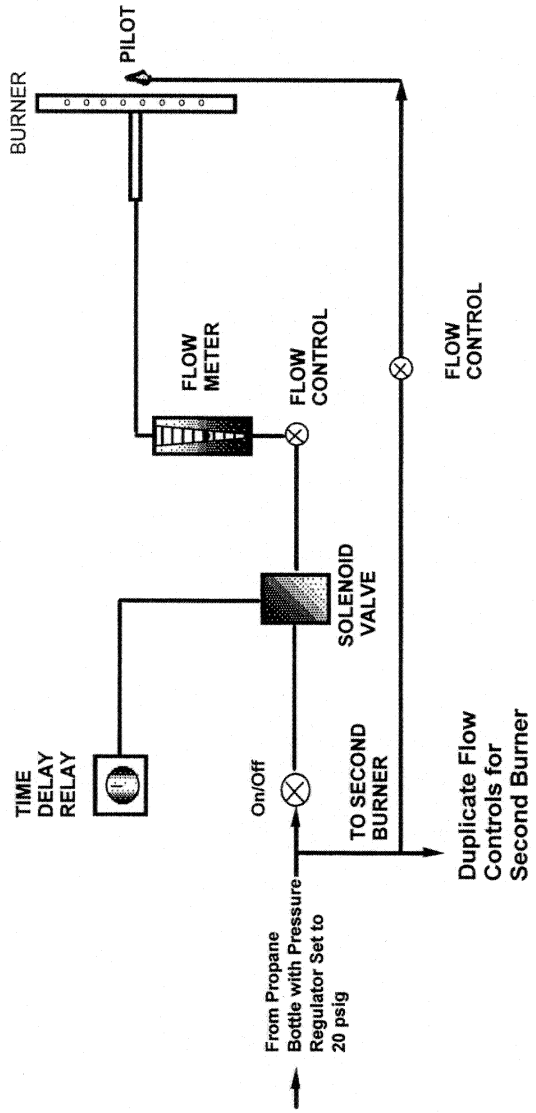

FIGURE 7. ELEMENTS OF PROPANE FLOW CONTROL FOR EACH BURNER

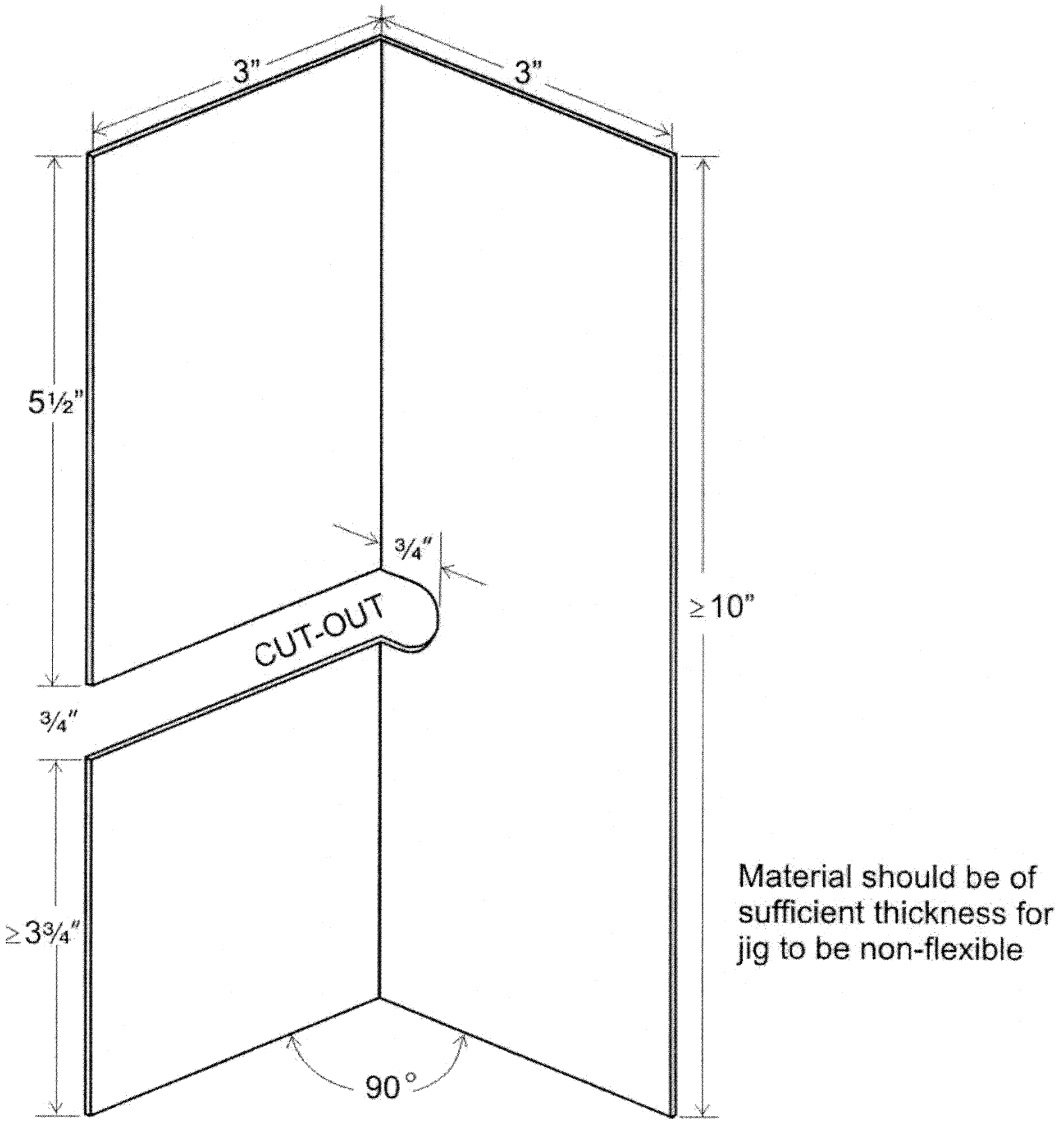

FIGURE 8 JIG FOR SETTING MATTRESS AND FOUNDATION SIDES IN SAME PLANE

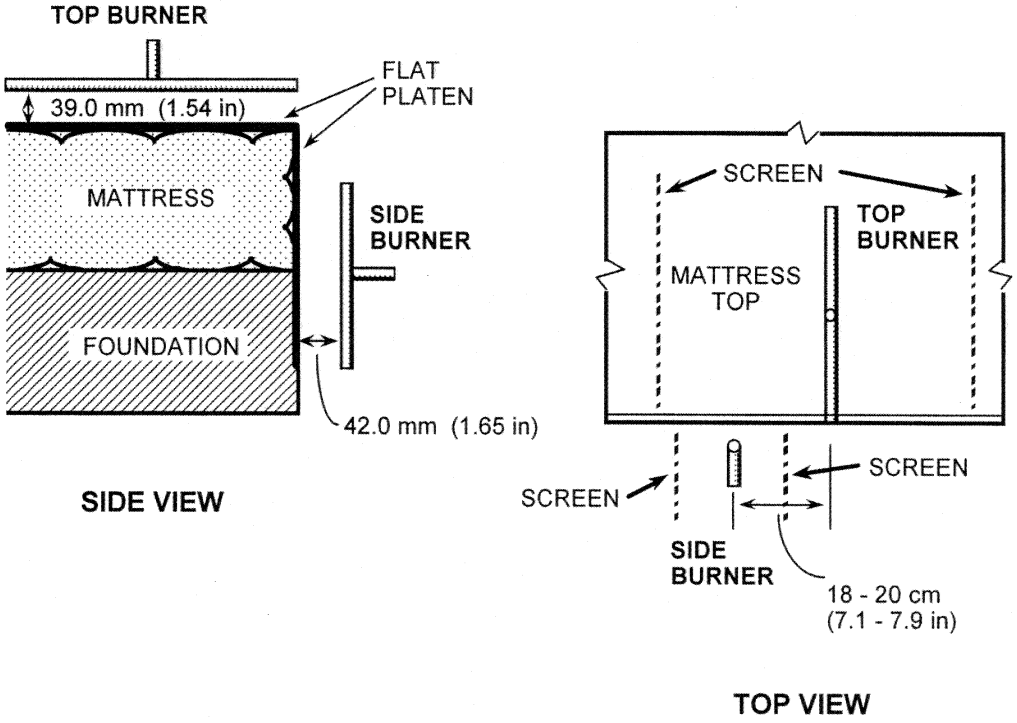

FIGURE 9. BURNER PLACEMENTS ON MATTRESS / FOUNDATION

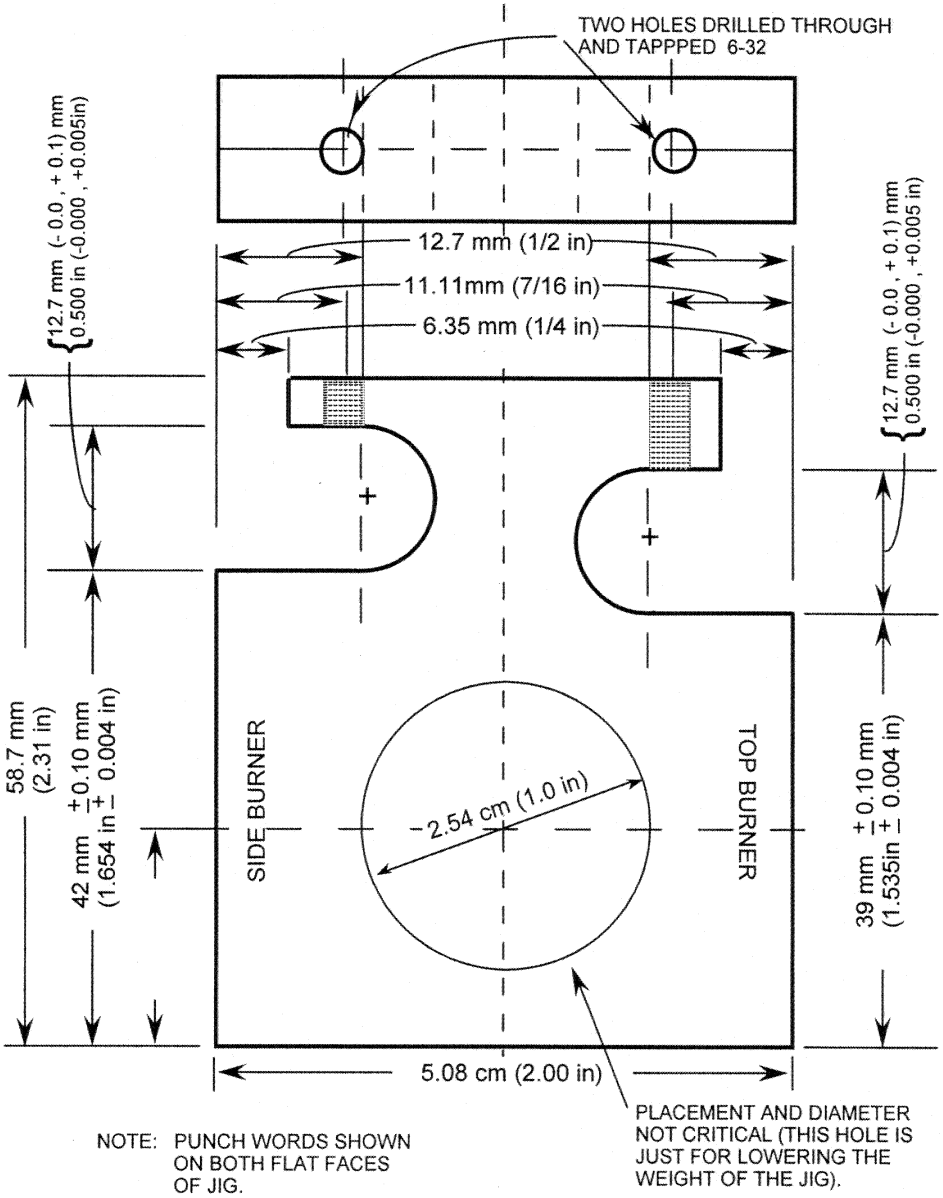

FIGURE 10. JIG FOR SETTING BURNERS AT PROPER DISTANCES FROM MATTRESS / FOUNDATION

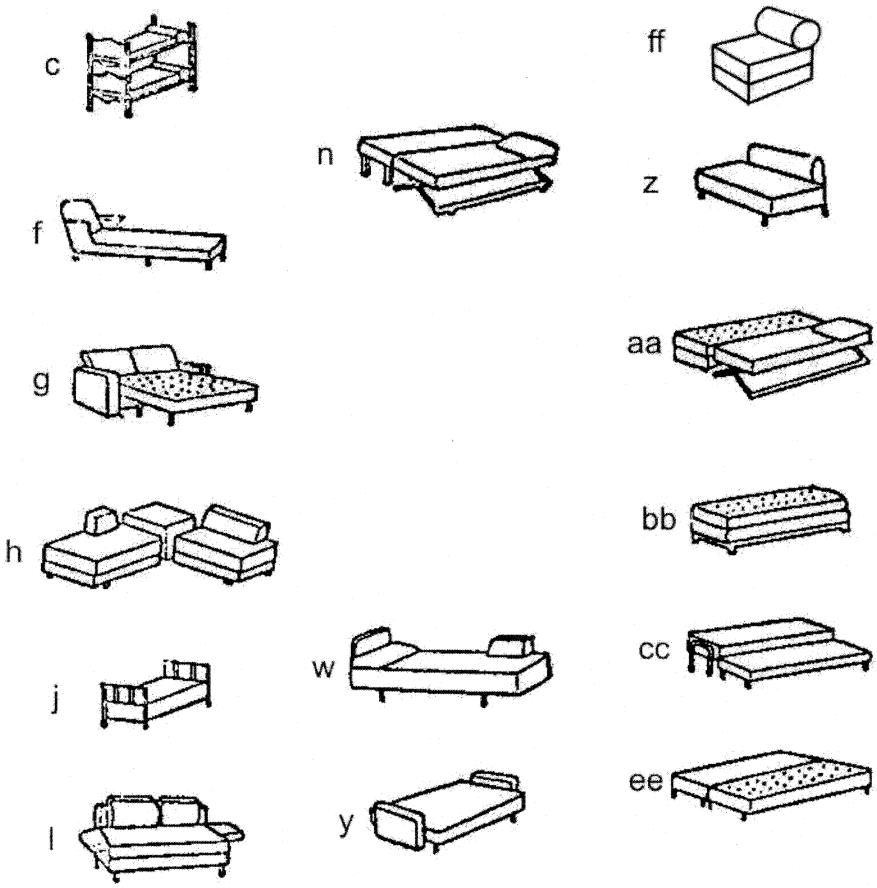

FIGURE 11. DIAGRAMS FOR GLOSSARY OF TERMS

Stitch Line

Manufactured by:
Company Name
Street
City, State ZIP

Date of Manufacture:
MM/YYYY

Model: <Model ID>

Prototype ID: <Prototype ID>

This mattress meets the requirements of 16 CFR Part 1633 (federal flammability (open flame) standard for mattress sets) when used with foundation <ID> .

THIS MATTRESS IS INTENDED TO BE USED WITH FOUNDATION(S):

<FOUNDATION ID>

Stitch Line

Manufactured by:
Company Name
Street
City, State ZIP

Date of Manufacture:
MM/YYYY

Model: <Model ID>

Prototype ID: <Prototype ID>

Foundation ID: <ID>

Figure 12. Labels for Domestic Mattress w/ Foundation

Stitch Line

Manufactured by:
Foreign Company Name
Street
City, State
Country

Date of Manufacture:
MM/YYYY

Importer/U.S. Records Location:
Importer Name
Street
City, State ZIP

Model: <Model ID>

Prototype ID: <Prototype ID>

This mattress meets the requirements of 16 CFR Part 1633 (federal flammability (open flame) standard for mattress sets) when used with foundation <ID>.

THIS MATTRESS IS INTENDED TO BE USED WITH FOUNDATION(S):

<FOUNDATION ID>

Stitch Line

Manufactured by:
Foreign Company Name
Street
City, State
Country

Date of Manufacture:
MM/YYYY

Importer/U.S. Records Location:
Importer Name
Street
City, State ZIP
Model: <Model ID>

Prototype ID: <Prototype ID>

Foundation ID: <ID>

Figure 13. Labels for Imported Mattress w/ Foundation

Stitch Line

Manufactured by:
Company Name
Street
City, State

Date of Manufacture:
MM/YYYY

Model: <Model ID>

Prototype ID: <Prototype ID>
<Prototype ID>

This mattress meets the requirements of 16 CFR Part 1633 (federal flammability (open flame) standard for mattress sets) when used without a foundation or with foundations <ID>.

THIS MATTRESS
IS INTENDED TO BE USED

***WITHOUT* A FOUNDATION**
OR
WITH FOUNDATION(S):

<FOUNDATION ID>

Figure 14. Label for Domestic Mattress Alone and w/ Foundation

Stitch Line

Manufactured by:
Foreign Company Name
Street
City, State
Country

Date of Manufacture:
MM/YYYY

Importer/U.S. Records Location:
Importer Name
Street
City, State ZIP

Model: <Model ID>

Prototype ID: <Prototype ID>
<Prototype ID>

This mattress meets the requirements of 16 CFR Part 1633 (federal flammability (open flame) standard for mattress sets) when used without a foundation or with foundations <ID>.

THIS MATTRESS
IS INTENDED TO BE USED

***WITHOUT* A FOUNDATION**
OR
WITH FOUNDATION(S):

<FOUNDATION ID>

Figure 15. Label for Imported Mattress Alone and w/ Foundation

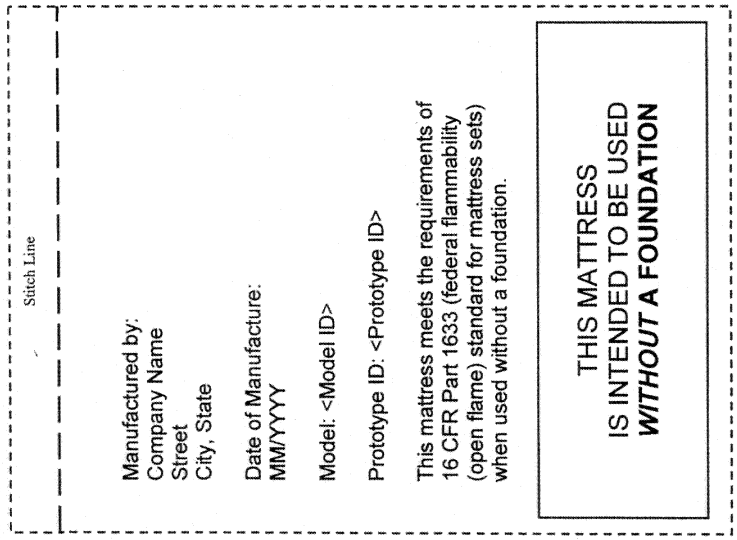

Figure 16. Label for Domestic Mattress Only

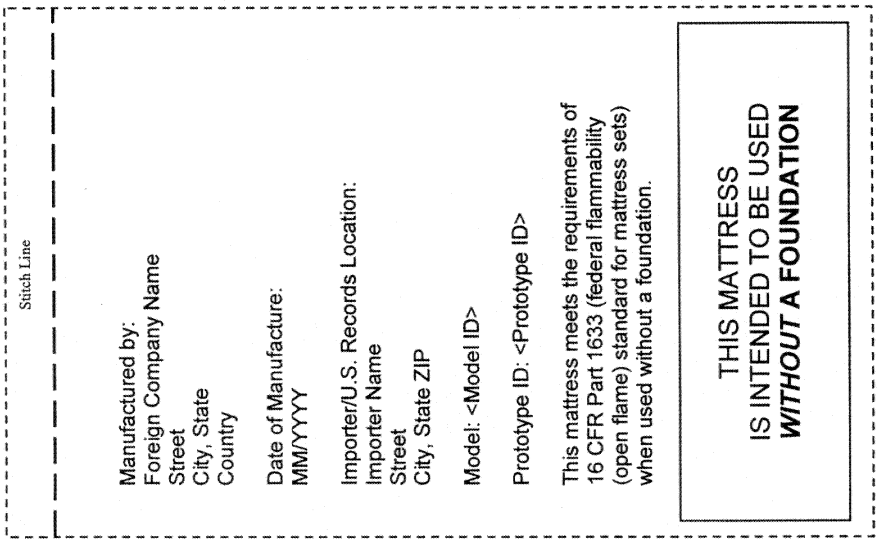

Figure 17. Label for Imported Mattress Only

BILLING CODE 6355–01–C

Dated: March 3, 2006.

Todd Stevenson,

Secretary, Consumer Product Safety Commission.

List of Relevant Documents

1. Briefing memorandum from Margaret Neily, Project Manager, Directorate for Engineering Sciences, to the Commission, ''Final Rule for the Flammability (Open Flame) of Mattress Sets,'' January 13, 2006.

2. Memorandum from Allyson Tenney, ES, to Margaret Neily, Engineering Sciences, ''Technical Rationale for the Standard for the Flammability (Open Flame) of Mattress Sets and Responses to Related Public Comments,'' January 6, 2006.

3. Memorandum from Linda Smith and David Miller, EPI, Updated Estimates of Residential Fire Losses Involving Mattresses and Bedding, December 2005.

4. Memorandum from David Cobb, LSC, to Allyson Tenney, ESFS, ''Durability of Flame Retardant Chemicals in Mattress Barriers After Repeated Insults with Synthetic Urine,'' December 12, 2005.

5. Memorandum from Diane Porter, LS, to Allyson Tenney, ES, ''Mattress Flammability—Suggested Revisions to Proposed 16 CFR Part 1633 Standard for the Flammability (Open Flame) of Mattresses and Mattress/Foundation Sets,'' January 6, 2006.

6. Terrance R. Karels, EC, to Margaret L. Neily, ES, ''Mattress Update,'' December 7, 2005.

7. Memorandum from Soumaya Tohamy, EC, to Margaret Neily, Project Manager, ''Final Regulatory Analysis Staff's Draft Final Standard to Address Open Flame Ignitions of Mattress Sets,'' January 10, 2006.

8. Memorandum from Soumaya Tohamy, EC, to Margaret Neily, Project Manager, ''Final Regulatory Flexibility Analysis for Staff's Draft Final Standard to Address Open Flame Ignitions of Mattress Sets,'' January 10, 2006.

9. Memorandum from Soumaya M. Tohamy, EC, to Margaret L. Neily, ES, ''Staff Response to Economic Comments on NPR for Open Flame Mattress Standard,'' January 10, 2006.

10. Memorandum from Robert Franklin, EC, to Margaret L. Neily, ES, ''Updated Environmental Information,'' December 14, 2005.

11. Memorandum from Treye Thomas and Patricia Brundage, HS, ''Quantitative Assessment of Health Effects from the Use of Flame Retardant (FR) Chemicals in Mattresses,'' January 9, 2006.

12. Memorandum from Treye A. Thomas and Patricia Brundage, HS, to Margaret Neily, ''Response to TERA Comments on Mattresses—Toxicity of Flame Retardant Chemicals,'' January 9, 2006.

13. Memorandum from Michael Babich, HS, to Margaret Neily, ''Response to Public Comments on Mattresses—Toxicity of Flame Retardant Chemicals,'' January 9, 2006.

14. Memorandum from Robert Franklin, EC, ''Environmental Assessment of a Draft Proposed Open-Flame Ignition Resistance Standard for Mattresses,'' October 27, 2004.

15. Memorandum from Patricia Semple, Executive Director, CPSC, to the Commission, ''Finding of No Significant Impact from Implementation of the Proposed Open-Flame Ignition Resistance Standard for Mattresses and Mattress/Foundation Sets,'' November 19, 2004.

16. Peer review comments on the CPSC Memo ''Quantitative Assessment of Potential Health Effects From the Use of Fire Retardant Chemicals in Mattresses,'' Lead authors: Lynne Haber, TERA Mike Jayjock, The Lifeline Group.

17. Memorandum from Martha A. Kosh, OS, to ES, ''Standard to Address Open Flame Ignition of Mattresses/Bedding; ANPR,'' List of comments on CF 02–1, December 13, 2001.

18. Memorandum from Martha A. Kosh, OS, to ES, ''Standard for the Flammability (Open Flame) of Mattresses and Mattress/foundation Sets; Notice of Proposed Rulemaking,'' List of comments on CF 05–1, March 31, 2005.

19. Memorandum from Martha A. Kosh, OS, to ES, ''Standard for the Flammability (Open Flame) of Mattresses and Mattress/foundation Sets; Notice of Proposed Rulemaking,'' list of comments on CF 05–3–1, August 23, 2005.

20. Memorandum from Jason Hartman, CE, to Margaret Neily, Director ESFS, ''Changes to the Labeling Provision of the Proposed Open Flame Mattress Standard,'' December 20, 2005.

21. Memorandum from Sarah B. Brown, ESHF, to Margaret Neily, Project Manager, ''Mattress Label Format and Layout Justification,'' December 13, 2005.

22. Memorandum from Jason Hartman, CE, to Margaret Neily, Director ESFS, ''Staff Response to Compliance-Related Comments on NPR for Open Flame Mattress Standard,'' December 14, 2005.

23. Memorandum from Jonathan D. Midgett, ESHF, to Margaret L. Neily, Project Manager, ''Human Factors Affecting Sampling on Mattress Surfaces,'' December 12, 2005.

24. Memorandum from Bharat Bhooshan, LSC, to Treye Thomas, HS, ''Vinylidene Chloride (VC) Testing in Mattress-barrier Samples,'' December 12, 2005.

25. Memorandum from David Cobb, LSC, to Treye Thomas, HS, ''Migration of Flame Retardant Chemicals in Mattress Barriers,'' December 12, 2005.

[FR Doc. 06–2206 Filed 3–14–06; 8:45 am]

BILLING CODE 6355–01–P