State of California
Department of Consumer Affairs

BUREAU OF ELECTRONIC & APPLIANCE REPAIR
HOME FURNISHINGS & THERMAL INSULATION
4244 SOUTH MARKET COURT, SUITE D
SACRAMENTO, CA 95834-1243

Proposed
Open Flame Test for Barrier Materials

Requirements, Test Procedure and Apparatus for Testing the Open Flame Resistance of Barrier Materials

August 2014

DRAFT

Requirements, Test Procedure and Apparatus for Testing the Open Flame Resistance of Barrier Materials

PURPOSE

The intent of this standard is to produce upholstered furniture which is safer from the hazards associated with small open-flame ignition.

Barrier Materials Component Test - Open-Fame Resistance

1. Scope - This standard applies to any material in the form of battings, pads, fabrics, etc. that is used as a barrier in upholstered seating furniture. The test method can also be used for upholstery cover fabrics that are fire resistant and serve as fire barriers as well. In addition, materials covered by this standard must also meet the applicable smoldering requirements of Technical Bulletin 117-2013.

2. Summary of Test Method - The test method consists of the application of an open-flame ignition source, to the bottom side of a horizontally mounted specimen of the barrier material while a layer of standard non-fire retardant polyurethane foam is placed on the top side of the barrier material. The test specimen is situated over an opening and is sandwiched between two rigid fire-rated insulating boards supported by a metal rack. Observations of the burning behavior and patterns are used to assess the performance of the specimen under these test conditions**.**

3. Significance and Use - This test method is designed to assess the response of a barrier material test specimen to an open-flame ignition source. The test provides an indication of the resistance of the barrier material to prevent an external flame reaching the underlayment of standard polyurethane foam and igniting it.

4. Test Apparatus and Materials - The test apparatus, including the horizontal test frame rack, is described in Annex A, Figures A1- A4.

The ignition source is a Meker-Fisher Gas Burner. The Meker-Fisher gas burner, the gas train and accessories are described in Annex B.
The Standard Polyurethane Foam (SPUF) – The standard polyurethane foam is described in Annex B of Technical Bulletin 117-2013, June 2013.

5. Test Facility and Hazards - The test facility, exhaust system and hazards are described in Annex C.

6. Conditioning - Condition test specimens and the standard PU foam prior to the test for a minimum of 24 hours at 21° ± 3 °C (70° ± 5 °F) and less than 55% RH. If the sample is taken from a finished article of furniture, conditioning does not begin until the component is removed from the furniture.

If conditions in the test area are not the same as in the conditioning area, tests should begin within 10 minutes of removal from conditioning area.

DRAFT

7. Test Specimen - Representative specimens of fibrous barrier materials shall be sampled for testing from various points in the batting, pad, or flat fibrous filling materials. Three specimens should be prepared from different areas of the material. The specimen shall consist of a swatch of fiber batting, pad, fabric or any other type of barrier material. Cut each specimen to 250 x 250 mm (10 x 10 in) in the thickness of use up to a maximum of 38 mm (1½ in).

8. Procedure:

8.1. Place the horizontal test rack in a test hood (See Annex C) that provides adequate ventilation to exhaust smoke and gases.

8.2. Before mounting the test specimen on the test rack prepare the gas burner ignition source. Set the gas flow to the Meker-Fisher burner as designated in Annex B. Ignite the Meker-Fisher burner and allow the flame to stabilize. Turn off the gas flow to the Meker-Fisher burner using the toggle on/off switch. Do not make any further adjustments to the gas flow. For the remainder of the test use only the on/off toggle switch. Place the bottom mounting plate on the rectangular metal retaining ring of the test rack. Make sure the plate is firmly positioned.

8.3. Place the barrier material test specimen on the top of the bottom horizontal mounting plate. Center the specimen flat so that the face side of the barrier material which is exposed to the heat source is towards the burner. Ensure barrier material is tight with no sagging or wrinkling.

8.4. Face side of the barrier test specimen is the surface of the material that is in contact with the cover fabric inside the furniture. The bottom side of the barrier is placed in contact with the interior fillings of the furniture. Many barrier materials are reversible and have no identifiable facing.

8.5. Place the top horizontal mounting plate over the barrier material, sandwiching the barrier material between the two mounting plates. Make sure the plate is firmly positioned.

8.6. Insert a piece of 5” X 5” X ½” standard polyurethane foam (SPUF) directly over the barrier material fitting snugly in the upper mounting plate rectangular opening, so that the foam contacts the barrier material at all points.

8.7. Place the Meker-Fisher burner in the center of the bottom plate of the test rack such that the top of the burner is positioned 4 inches (100 mm) below the center of the bottom surface of the test specimen. (Figure A-2).

8.8. Start the timing device one minute before applying the ignition flame to the test specimen. At one minute turn on the toggle switch and simultaneously ignite the Meker-Fisher burner using a butane lighter which subjects the test specimen to the flame from underneath. Turn off the toggle switch after one minute of flame impingement.

8.9. Continue test until all traces of flaming and smoldering have ceased. Make and record observations regarding penetration of the flame through the fiber specimen and/or decomposition and burning of the standard polyurethane foam.

8.10. When all combustion is ceased carefully remove the mounting plates and the remaining test materials off the metal test rig.

8.11. Thoroughly clean the mounting plates and allow them to reach room temperature before conducting the next test.

9. Pass/Fail Criteria

A single test specimen fails to meet the requirements of this test procedure if the standard polyurethane foam (SPUF) ignites:

- A barrier material passes the test if three initial specimens pass the test.

DRAFT

- If more than one initial specimen fails, the barrier material fails the test.
- If any one of the three initial specimens fails, repeat the test on additional three specimens. If all three additional specimens pass the test, the barrier material passes the test. If any one of the additional three specimens fails, the barrier sample fails the test.

10. Test Report

The test report shall contain, at a minimum, the following information:

- Name and address of the test laboratory.
- Date of the test(s).
- Operator conducting the test.
- Complete description of the test materials.
- Complete description of any procedures different from those described in this test method.
- Observations shall be made, and included in the report, of the behavior of the specimen in response to the application of the burner, specifically noting the following:
    - The time of flaming ignition of the foam when applicable.
    - Extended smoldering (non-flaming) combustion.
    - The condition of the standard polyurethane foam (SPUF) used in the test (e.g. 50% recovered, completely consumed, …)
    - The post-test condition of the test material.
    - The total test time, i.e., time from start of ignition to the end of all combustion.
- Statement of overall Pass/Fail results.
- Post-test photographs of the test specimens.

DRAFT

ANNEX A

Horizontal Test Apparatus

A test rack constructed, as in Figures A-1 to A-4, shall be used to support the sample for testing. The rack shall be constructed with a 356 x 356 mm (14 x 14 in) stainless steel metal (2.4 mm (3/32 in) thick) bottom plate. At each corner of the plate, a 356 mm (14 in) long, 12 mm (1/2 in) O.D. Threaded rod shall be mounted vertically to allow adjustment of a horizontal test support to various heights using threaded nuts. The test support shall consist of a fixed rectangular metal retaining ring with inside openings of 254 x 254 mm (10 x 10 in). The metal rectangular retaining ring shall have holes to act as guides for positioning threaded rods through them.

Two 300 X 300 mm (12 X 12 in.) mounting plates, as shown in Figures A1 through A3, are made of 25 mm (1 inch) thick inorganic 740-kg/m^3 (46 lb/ft^3) nominal density calcium silicate boards. A 12.7 X 12.7 mm (5 X 5 in) opening is cut at the center of each plate. Four 12 ½ mm (½ inch) holes are made at the four corners of each mounting plate for mounting on through the threaded metal rods. The mounting plates are painted with fire resistant (high temperature) flat black paint.

Note: Other heat resistant insulation materials with physical and thermal properties similar to the calcium silicate board can also be used for the mounting plates.

DRAFT

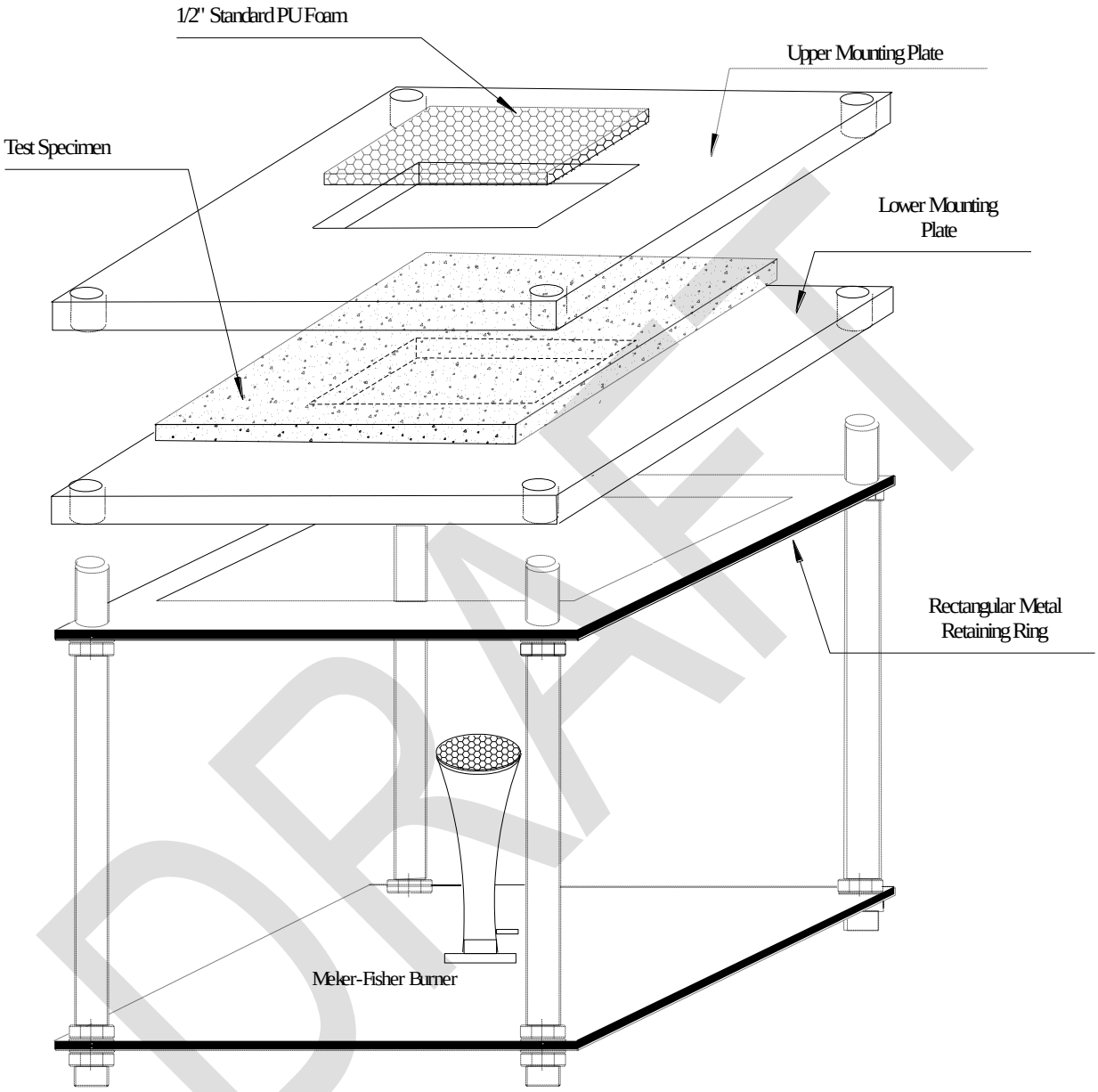

DRAFT

(Drawings Not to Scale)

Figure A-1. Horizontal Test Apparatus Assembly
(Exploded View of Barrier Test Assembly)

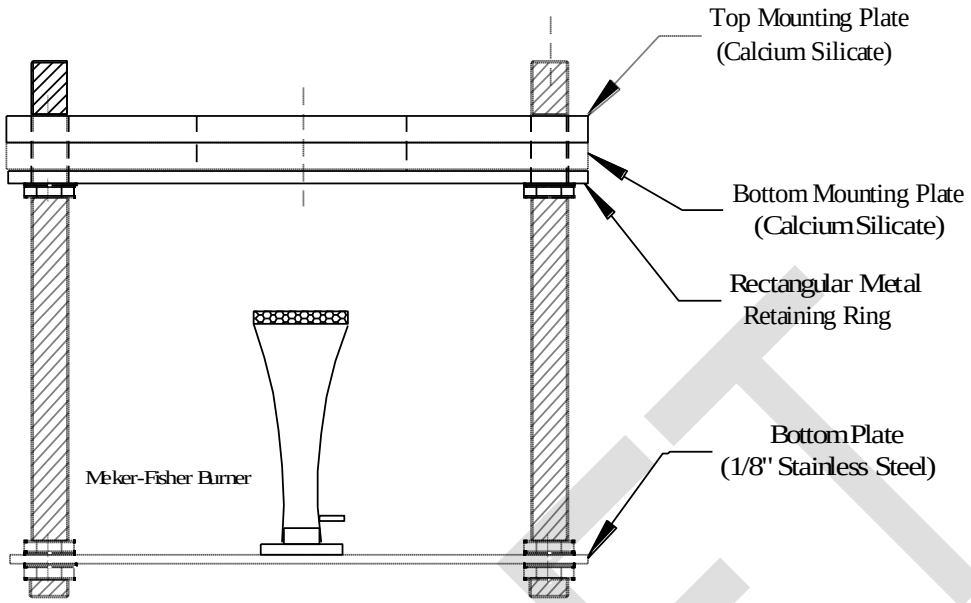

Side view of the horizontal test apparatus

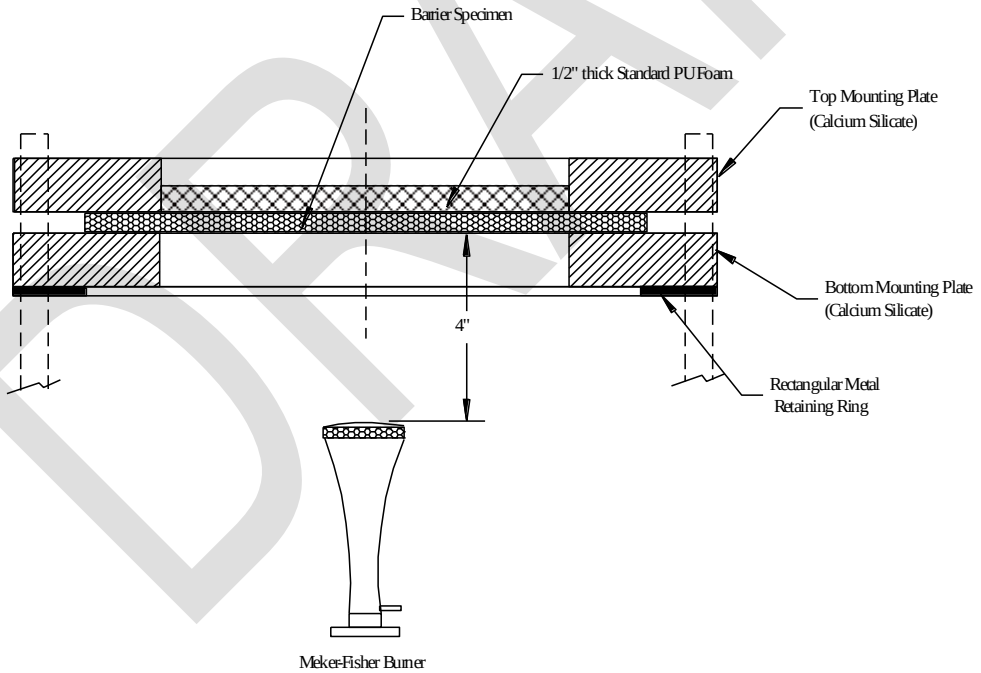

Mounting of the test specimen on the horizontal test apparatus
(Cross Sectional Side View)

(Drawing not to scale)

Figure A-2. Horizontal Test Apparatus Assembly – Side Views

DRAFT

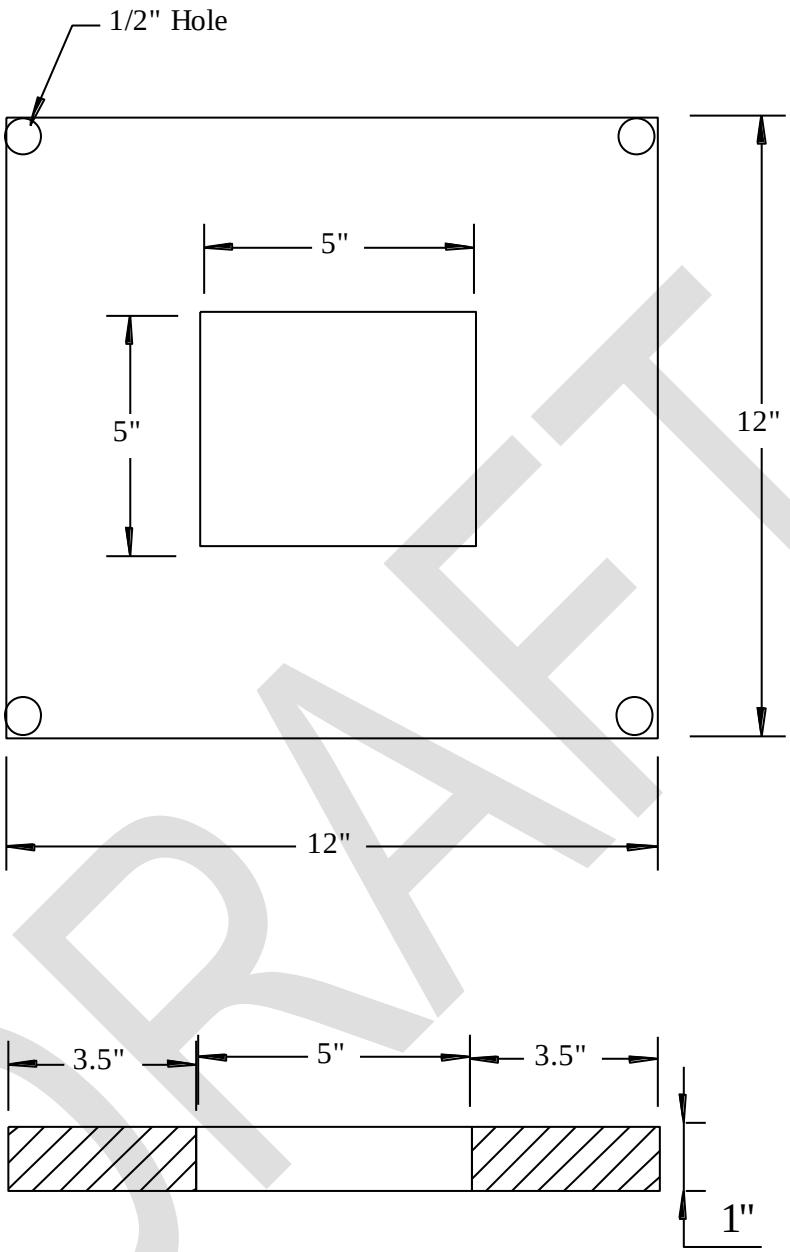

Mounting Plates (Calcium Silicate)

(Drawings not to Scale)

Figure A-3. Horizontal Test Apparatus Assembly – Mounting Plates

DRAFT

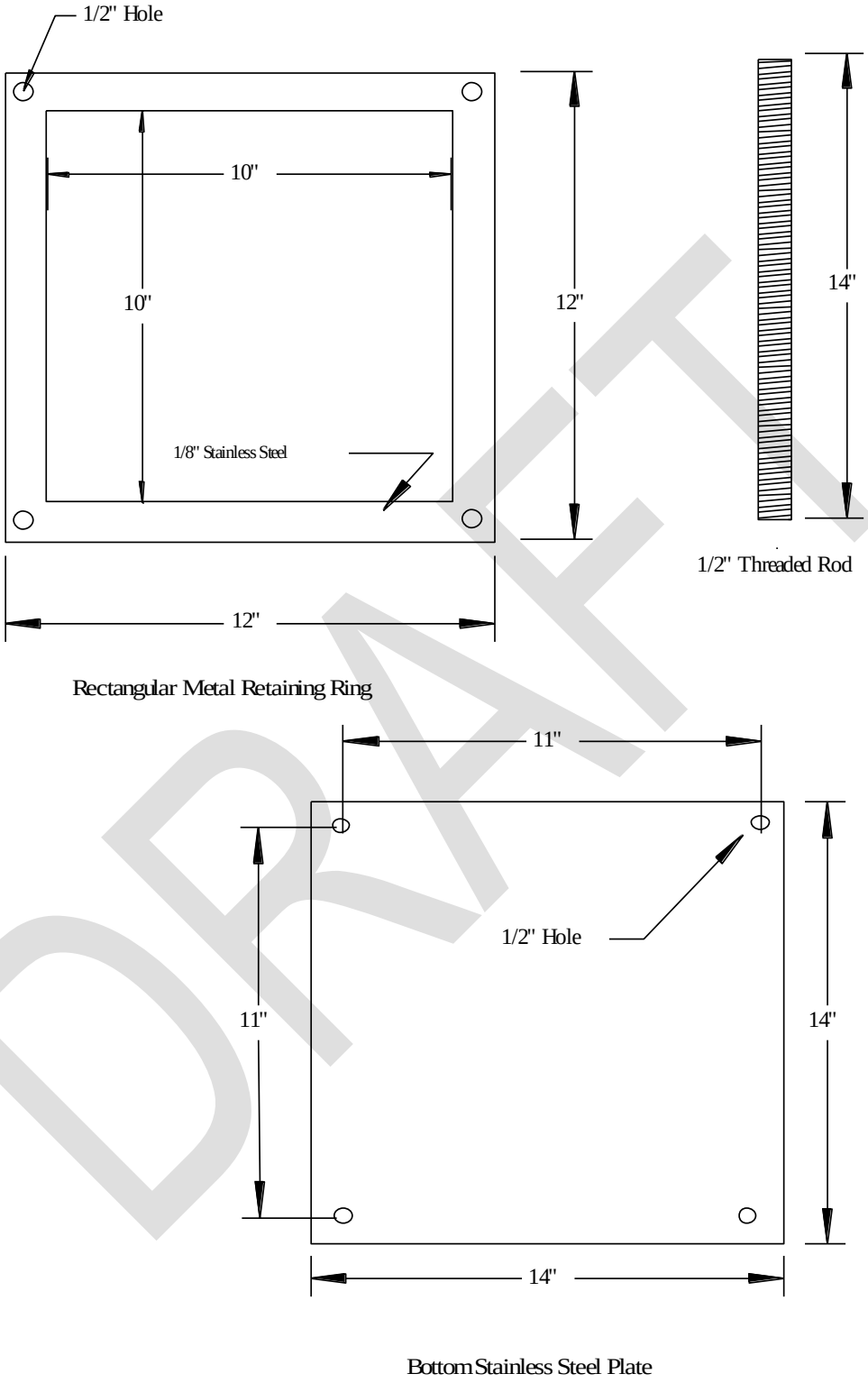

DRAFT

Figure A-4. Horizontal Test Apparatus Assembly – Parts of Test Frame

ANNEX B

Ignition Source

Butane Gas Flame Ignition Source for Barrier Materials

- The ignition source for the barrier open flame test consists of a Meker-Fisher burner with a 32 mm (1.25 in.) diameter top and with orifice size of 1.2 mm (3/64 in.) for Butane gas.

- The flow rate of butane shall be 500 ± 10 ml/min (0.0177 ft^3/min) at 23 °C (73 °F).

The Gas Train

- A gas rotameter with range to provide flow rate of equivalent to 500 ± 10 ml/min (0.0177 ft^3/min) of air at standard conditions.

- C.P. Grade butane, 99.0% purity with 2-stage regulator shall be provided.

- The following items are required to connect the butane cylinder to the burners: flexible tubing (2.5 to 3.0 m (8 to 10 ft) in length, 7.0 ± 1.0 mm (1/4 ± 0.04 in) I.D.), needle valve, an on-off valve and a cylinder regulator capable of providing a nominal outlet pressure of 2.8 kPa (28 mbar).

NOTE: The following specific items have been found to be satisfactory for the butane gas train: Air Products CP grade, 99.0% purity butane, 20 lb. cylinder; Matheson 2-stage regulator, Model 8-2-510; Matheson 9.0 kPa pressure gauge, P/N 63-3103.

Figure B-1. Meker-Fisher Gas Burner

DRAFT

ANNEX C

Test Facility, Exhaust System and Hazards

Test Facility/Exhaust System

The test area shall be a room with a volume greater than 20 m^3 (in order to contain sufficient oxygen for testing) or a smaller area equipped with inlet and extraction systems permitting the necessary flow of air. All smoldering tests shall be conducted under appropriate test hoods and/or test cabinets equipped with variable speed exhaust fans or other means of controlling the exhaust flow rates, such as dampers. Airflow rates shall be between 0.02 m/s and 0.2 m/s (4 and 40 ft/min), measured in the locality of the test specimen. Position specimen to provide adequate air around the test specimen without disturbing the burning behavior.

Note 1: These rates of airflow have been shown to provide adequate oxygen without physically disturbing the burning behavior of the ignition source or the specimen.

Note 2: A fume hood with air curtains across the face and zero air velocity at the test locations is recommended. Zero air velocity is indicated by an undisturbed vertical smoke plume of 6 inches.

Hazards

- There are potential risks associated with running any fire test. It is essential that suitable precautions be taken, which include the provision of breathing apparatus and proper safety equipment.
- Products of combustion can be irritating and dangerous to test personnel. Test personnel must avoid exposure to smoke and gases produced during testing.
- Suitable means of fire extinguishment shall be at hand. When the termination point of the experiment has been reached, the fire is extinguished, if necessary, with carbon dioxide or water. Presence of a back-up fire extinguisher is recommended. It may be difficult to judge when all combustion in a test specimen has ceased due to potential smoldering or burning deep inside the specimen even after extinguishment. Care should be taken that specimens are disposed of only when completely inert.

.

DRAFT